J:\TS\07\07-229 ODOT District 7 GES\80631\structures\7a-7e Combined\7AE_GT001.dgn 12/11/2008 11:45:52 AM arhayes ODOT_MS_PDF_FULL.plt ODOT_MS_PENTABLE.tbl M-E Companies, Inc.
D07 - VA-BH-FY2009
090140 PID - 83358
Dist 7 3/4/2009

STATE OF OHIO

DEPARTMENT OF TRANSPORTATION

D07-BH-FY2009

DISTRICT 7 MAINTENANCE PROJECT

MONTGOMERY AND SHELBY COUNTIES

PROJECT LOCATION MAP

REFER TO SHEETS 2 THRU 5 OF 45 FOR LOCATION MAPS.

INDEX OF SHEETS:

TITLE SHEET	1
PROJECT LOCATION MAPS	2 - 5
STRUCTURE GENERAL NOTES	6 - 8
ESTIMATED QUANTITIES	9 ,9a, 9b
MAINTENANCE OF TRAFFIC	10 - 14
STRUCTURE REHABILITATION PLANS	
STRUCTURE: MOT-40-1442	15 - 17
STRUCTURE: MOT-70-1130 L/R	18 - 23
STRUCTURE: SHE-29-1744	24 - 25
STRUCTURE: SHE-75-0614 L/R	26 - 27
STRUCTURE: SHE-75-0888 L/R	28 - 30
STRUCTURE REHABILITATION FOR THE FOLLOWING STRUCTURES IS PROVIDED BY WAY OF NOTES ON SHEET 8	
STRUCTURE: MOT-40-1081	
STRUCTURE: MOT-75-1044 L/R	
STRUCTURE: MOT-675-0055 L	
STRUCTURE REHABILITATION PLANS (CONTINUED)	
STRUCTURE: MOT-75-0666R	31
STRUCTURE: MOT-75-1208	32
STRUCTURE: MOT-75-1226L	33 - 35
STRUCTURE: MOT-75-1226R	36 - 37
STRUCTURE: MOT-75-1261L	38
STRUCTURE: MOT-75-1261R	39
STRUCTURE: MOT-75-1271L	40
STRUCTURE: MOT-75-1271R	41
STRUCTURE: MOT-75-1271D	42
STRUCTURE: MOT-75-1281L	43
STRUCTURE: MOT-75-1281R	44
STRUCTURE REPAIR DETAILS	45

PROJECT DESCRIPTION

THIS PROJECT INVOLVES BEARING RESETTING/ REFURBISHING, CONCRETE PATCHING, REPAIR OF EXPANSION JOINT AND END DAM CROSS FRAMES, REPAIR OF FATIGUE CRACKS IN STEEL PLATE GIRDERS AND OTHER MISCELLANEOUS REPAIRS FOR VARIOUS ODOT DISTRICT 7 BRIDGES.

EARTH DISTURBED AREAS

PROJECT EARTH DISTURBED AREA:	N/A
ESTIMATED CONTRACTOR EARTH DISTRUBED AREA:	N/A
NOTICE OF INTENT EARTH DISTURBED AREA:	N/A

2008 SPECIFICATIONS

THE STANDARD SPECIFICATIONS OF THE STATE OF OHIO, DEPARTMENT OF TRANSPORTATION, INCLUDING CHANGES AND SUPPLEMENTAL SPECIFICATIONS LISTED IN THE PROPOSAL SHALL GOVERN THIS IMPROVEMENT.

I HEREBY APPROVE THESE PLANS AND DECLARE THAT THE MAKING OF THIS IMPROVEMENT WILL NOT REQUIRE THE CLOSING TO TRAFFIC OF THE HIGHWAY AND THAT PROVISIONS FOR THE MAINTENANCE AND SAFETY OF TRAFFIC WILL BE AS SET FORTH ON THE PLANS AND ESTIMATES.

DESIGN DESIGNATION

CURRENT ADT (N/A)	N/A
DESIGN YEAR ADT (N/A)	N/A
DESIGN HOURLY VOLUME (N/A)	N/A
DIRECTIONAL DISTRIBUTION	N/A
TRUCKS (24 HOUR B&C)	N/A
DESIGN SPEED	N/A
LEGAL SPEED	N/A
DESIGN FUNCTIONAL CLASSIFICATION:	N/A
NHS PROJECT	N/A

DESIGN EXCEPTIONS

N/A

UNDERGROUND UTILITIES

CONTACT BOTH SERVICES
CALL TWO WORKING DAYS
BEFORE YOU DIG

CALL
1-800-362-2764
(TOLL FREE)

OHIO UTILITIES PROTECTION SERVICE
NON-MEMBERS
MUST BE CALLED DIRECTLY

OIL & GAS PRODUCERS PROTECTIVE SERVICE CALL: **1-800-925-0988**

PLAN PREPARED BY:

M-E COMPANIES
635 Brookside Boulevard
Westerville, OH 43081
Contact: M. CIOTOLA
614-818-4900 ext. 357
Fax 818-4901

ENGINEERS SEAL:

STATE OF OHIO
CHRISTOPHER A. HOWARD
E-62429
REGISTERED
PROFESSIONAL ENGINEER

SIGNED: Christopher A. Howard
DATE: 12-12-08

STANDARD CONSTRUCTION DRAWINGS

AS-1-81	07-19-02	MT-95.30	09-05-06				
EXJ-4-87	07-19-02	MT-95.31	09-05-06				
PCB-91	07-19-02	MT-95.32	09-05-06				
SBR-1-99	07-19-02	MT-95.50	09-05-06				
		MT-102.20	09-05-06				
		MT-105.10	10-18-02				
		MT-105.11	10-18-02				

SUPPLEMENTAL SPECIFICATIONS

SS800-2008	1/16/09
832	4/25/06
843	4/18/03

SPECIAL PROVISIONS

OEPA RENO DEMO

APPROVED Rex Dickey, P.E., P.S. / PRW
DATE 12-12-08 DISTRICT DEPUTY DIRECTOR

APPROVED James G. Beasley
DATE 1-9-09 DIRECTOR, DEPARTMENT OF TRANSPORTATION

FEDERAL PROJECT NO. E071(186)

PID NO. 83358

CONSTRUCTION PROJECT NO.

RAILROAD INVOLVEMENT CSX TRANSPORTATION

D07-BH-FY2009

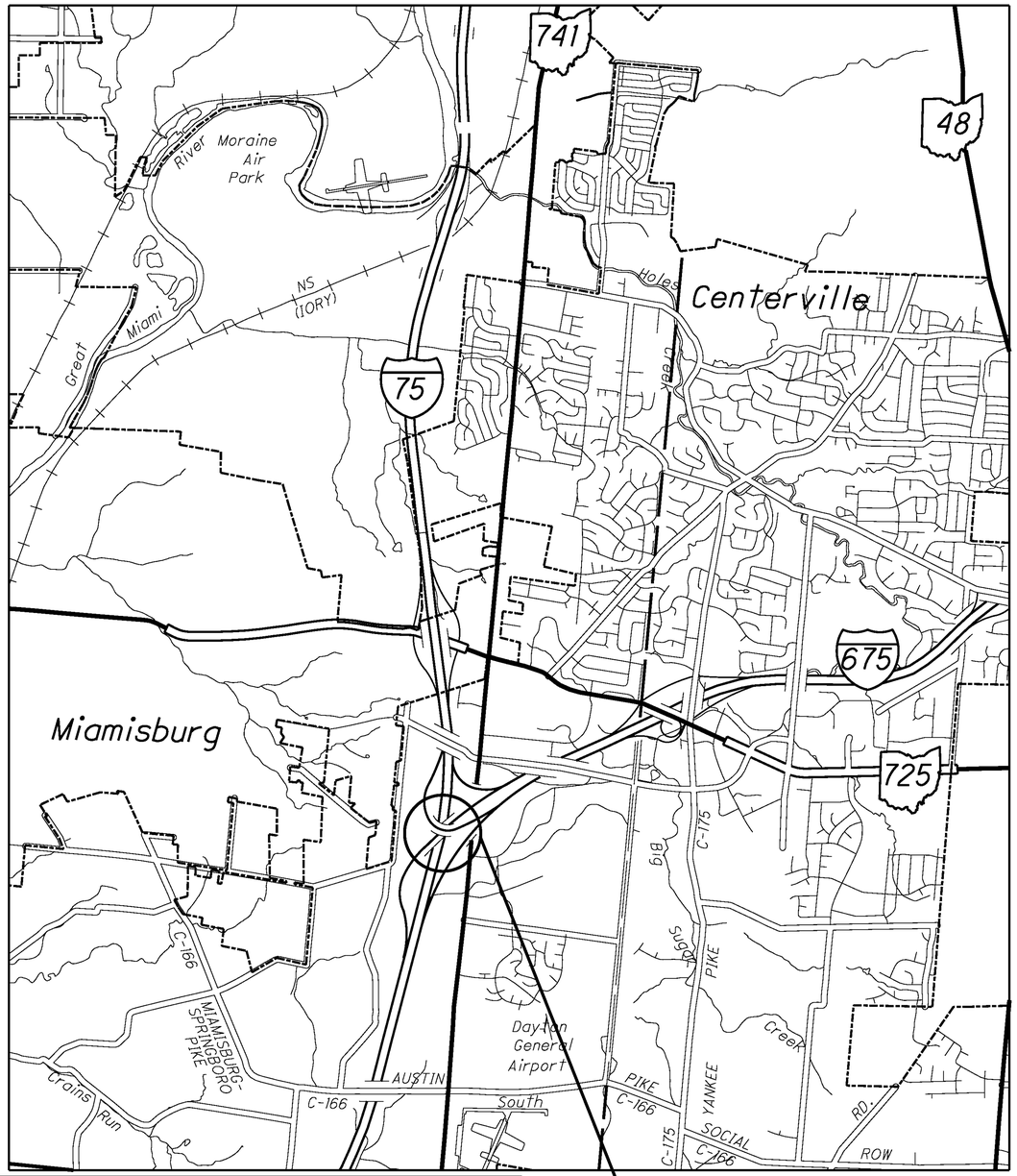

MOT-675-0055L

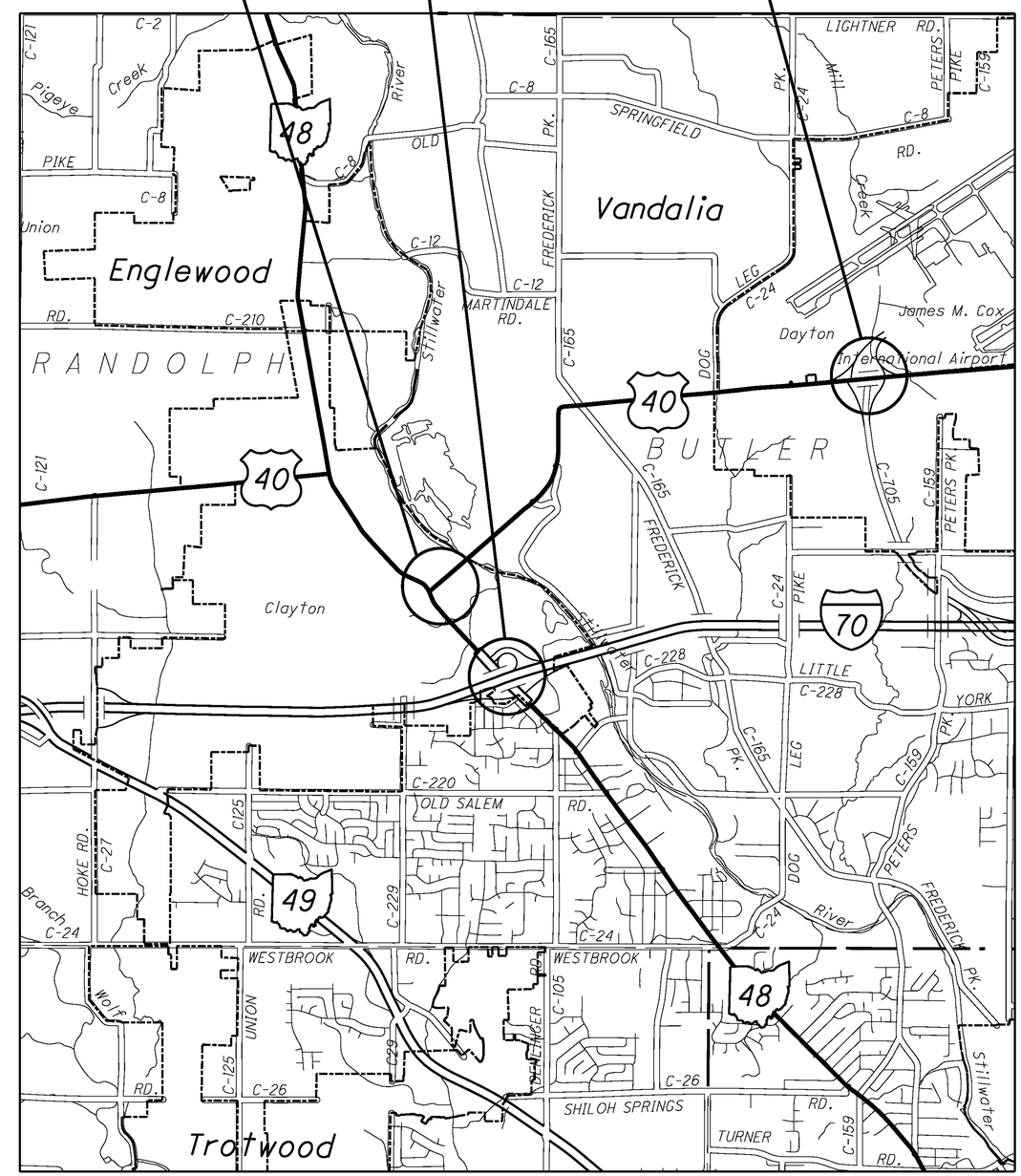

INTERSTATE & DIVIDED HIGHWAY
UNDIVIDED STATE & FEDERAL ROUTES
OTHER ROADS

INTERSTATE
U.S. ROUTE
STATE ROUTE

LOCATION MAPS

NOT TO SCALE

HORIZONTAL SCALE IN FEET

CALCULATED CAH
CHECKED SRB

PROJECT LOCATION MAP

D07-BH-FY2009
PID No. 83358

J:\TS\07\07-229 ODOT District 7 GES\80631\structures\7a-7e Combined\7AE_Location Map1.dgn 12/15/2008 9:26:06 AM arhayes ODOT_MS_PDF_FULL.plt ODOT_MS_PENTABLE.tbl M-E Companies, Inc.

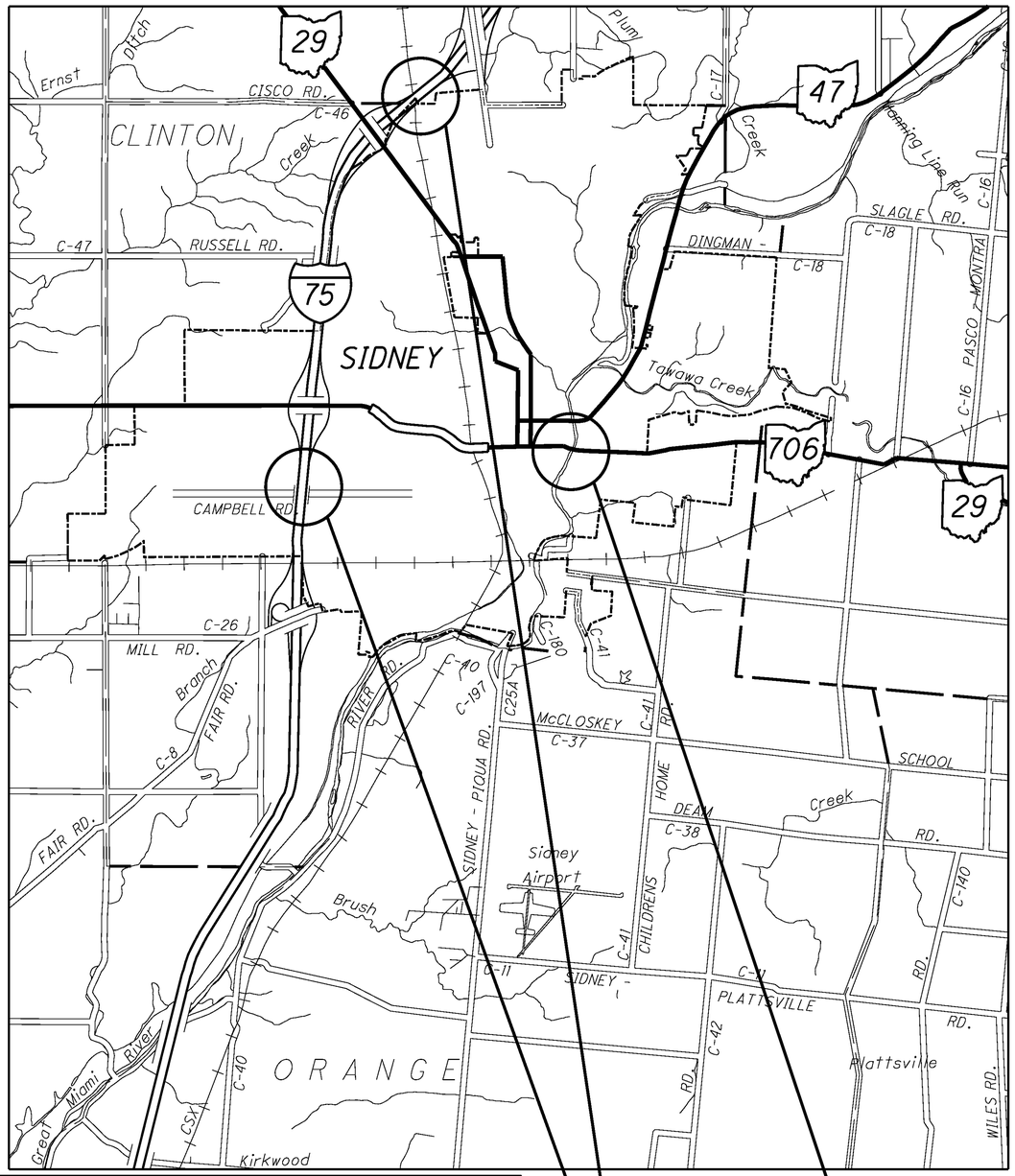

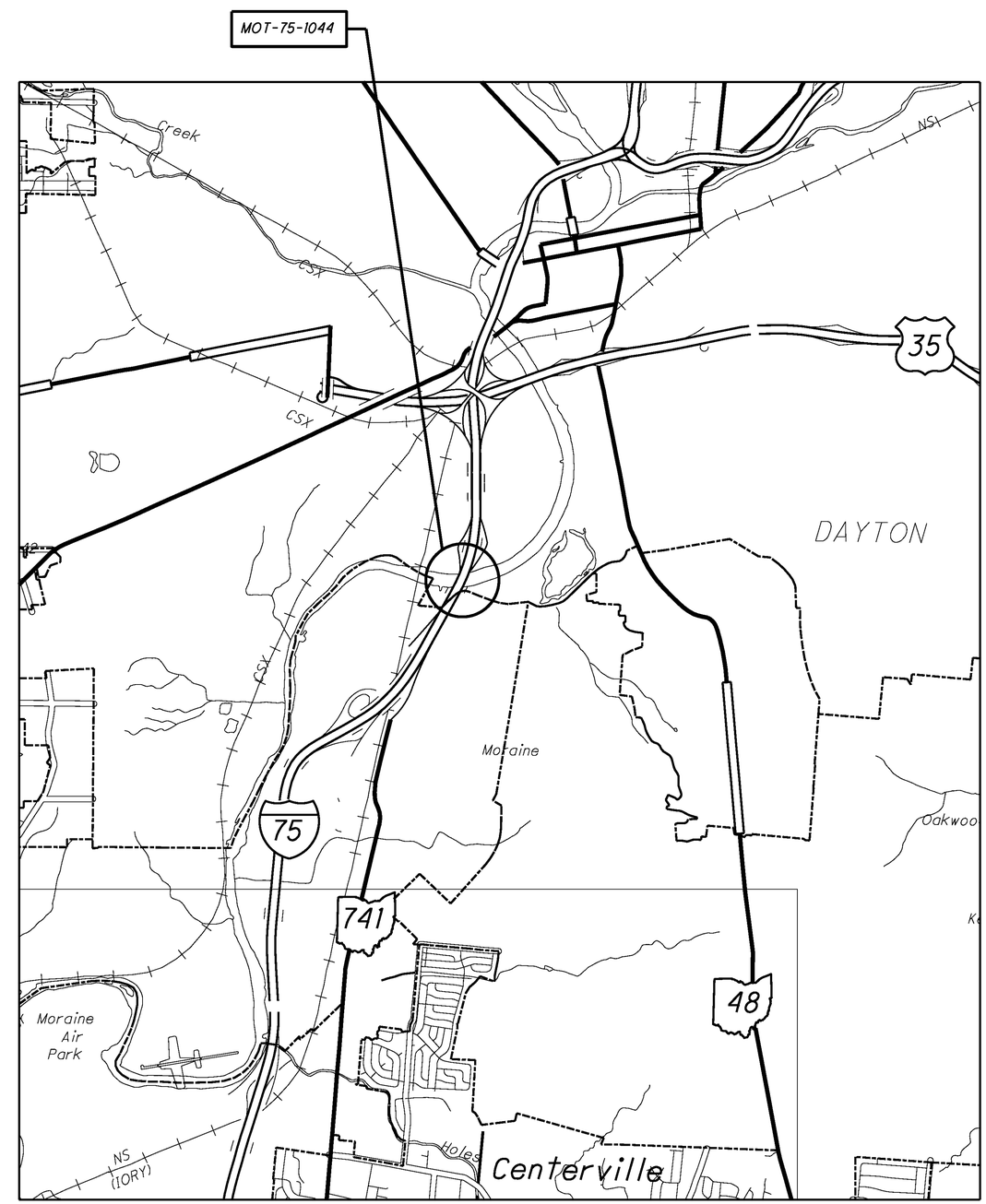

SHE-75-0888 L/R

SHE-29-1744

SHE-75-0614 L/R

INTERSTATE & DIVIDED HIGHWAY

UNDIVIDED STATE & FEDERAL ROUTES

OTHER ROADS

INTERSTATE

U.S. ROUTE

STATE ROUTE

LOCATION MAPS

NOT TO SCALE

HORIZONTAL SCALE IN FEET

CALCULATED CAH

CHECKED SRB

PROJECT LOCATION MAP

D07-BH-FY2009

PID No. 83358

J:\TS\07\07-229 ODOT District 7 GES\80631\structures\7a-7e Combined\7AE_Location Map1.dgn 12/15/2008 9:26:08 AM arhayes ODOT_MS_PDF_FULL.plt ODOT_MS_PENTABLE.tbl M-E Companies, Inc.

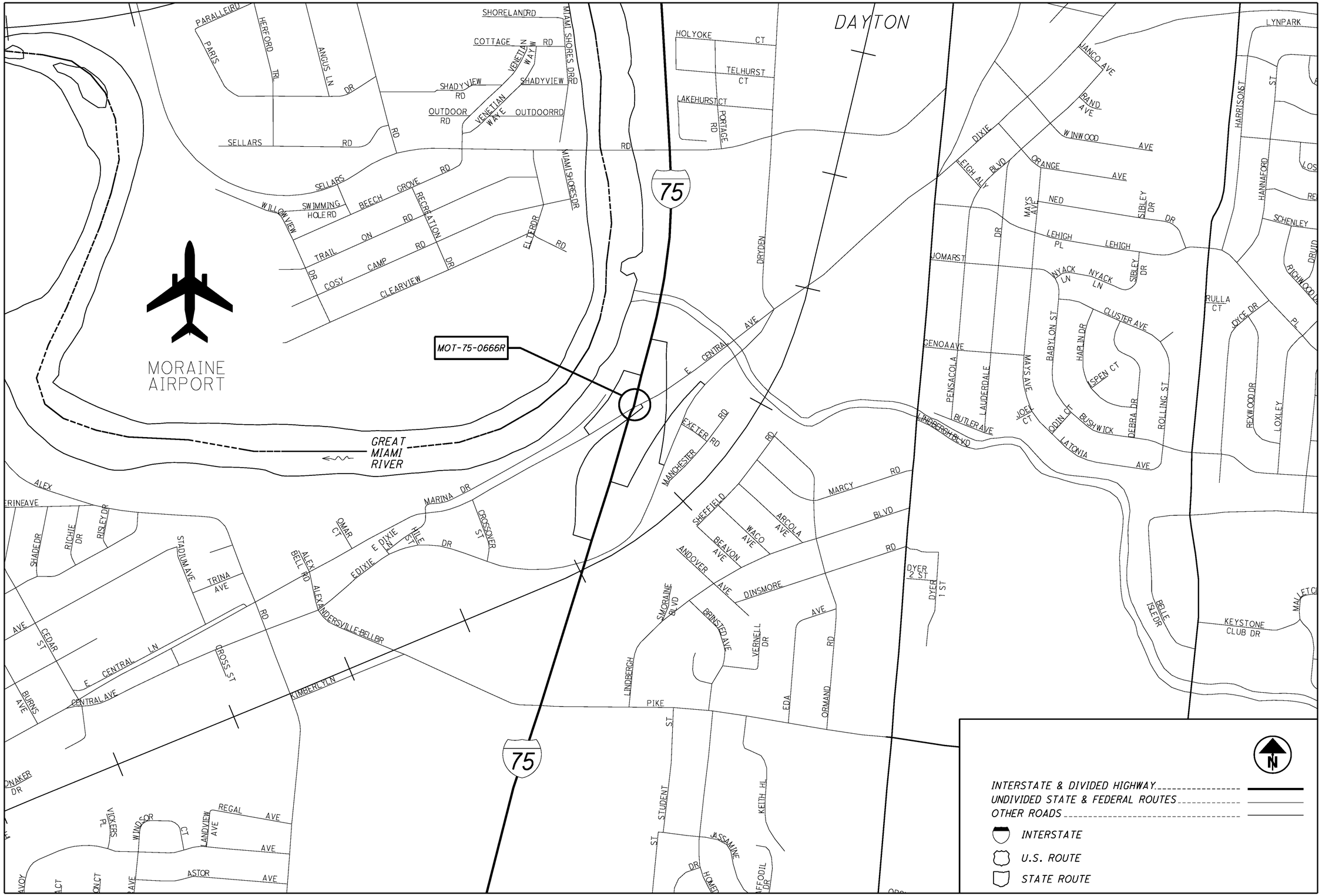

LOCATION MAP *NOT TO SCALE*

HORIZONTAL SCALE IN FEET

CALCULATED ARH
CHECKED SRB

PROJECT LOCATION MAP
BRIDGE NO.:0666R

D07-BH-FY2009
PID No. 83358

J:\TS\07\07-229 ODOT District 7 GES\80631\structures\7a-7e Combined\7AE_Location Map2.dgn 12/15/2008 9:26:10 AM arhayes ODOT_MS_PDF_FULL.plt ODOT_MS_PENTABLE.tbl M-E Companies, Inc.

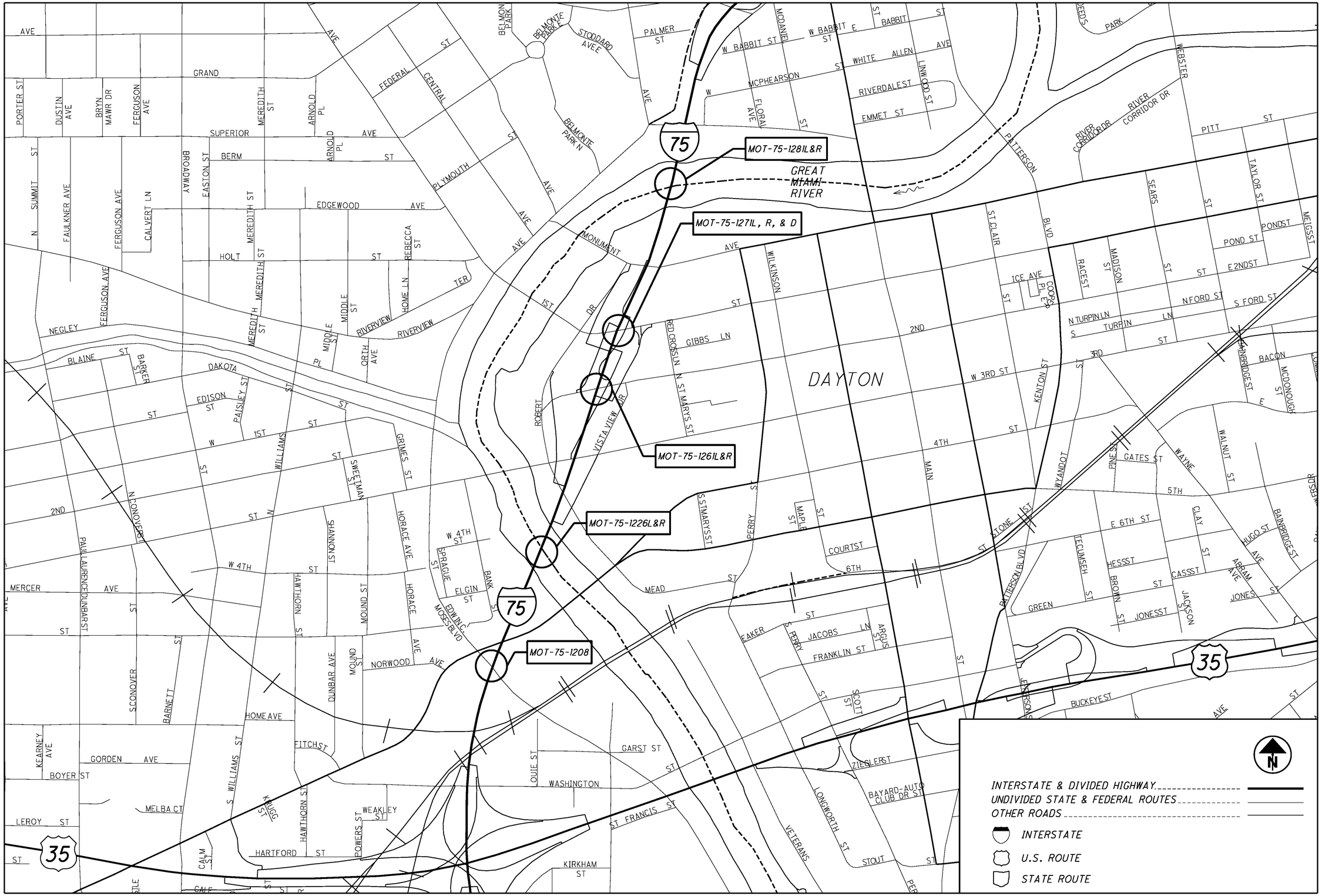

LOCATION MAP *NOT TO SCALE*

HORIZONTAL SCALE IN FEET

CALCULATED ARH
CHECKED SRB

PROJECT LOCATION MAP

BRIDGE NO.:1208, 1226R, 1261L&R, 1271L,R&D, 1281L&R

D07-BH-FY2009
PID No. 83358

J:\TS\07\07-229 ODOT District 7 GES\80631\structures\7a-7e Combined\7AE_Location Map2.dgn 12/15/2008 9:26:12 AM arhayes ODOT_MS_PDF_FULL.plt ODOT_MS_PENTABLE.tbl M-E Companies, Inc.

j:\TS\07\07-229 ODOT District 7 GES\80631\structures\7a-7e Combined\7AE_GN001.dgn 1/13/2009 3:04:03 PM arhayes ODOT_MS_PDF_FULL.plt ODOT_MS_PENTABLE.tbl M-E Companies, Inc.

REFERENCE:

REFERENCE SHALL BE MADE TO STANDARD DRAWING(S):
AS-1-81 REVISED 07-19-02
EXJ-4-87 REVISED 07-19-02
PCB-91 REVISED 07-19-02
BR-1-99 REVISED 07-19-02

DESIGN SPECIFICATIONS:

THIS STRUCTURE CONFORMS TO THE "STANDARD SPECIFICATIONS FOR HIGHWAY BRIDGES" ADOPTED BY THE AMERICAN ASSOCIATION OF STATE HIGHWAY AND TRANSPORTATION OFFICIALS, 17TH EDITION, AND THE CURRENT EDITION OF THE ODOT BRIDGE DESIGN MANUAL.

DESIGN LOADING:

HS25, CASE I, CASE II AND THE ALTERNATE MILITARY LOADING FUTURE WEARING SURFACE (FWS) OF 60 PSF

DESIGN STRESSES:

CLASS S CONCRETE FOR SUPERSTRUCTURE - COMPRESSIVE STRENGTH 4500 PSI

CLASS C CONCRETE FOR SUBSTRUCTURE - COMPRESSIVE STRENGTH 4000 PSI

STRUCTURAL STEEL - ASTM A709, GRADE 50 (YIELD STRENGTH 50,000 PSI)

REINFORCING STEEL - ASTM A615 OR A996, GRADE 60, MINIMUM YIELD STRENGTH 60,000 PSI

WELD INFORMATION
ALL WELD MATERIAL SHALL BE EXX70 KSI

UTILITY LINES:

THE UTILITY(IES) SHALL BARE ALL EXPENSE INVOLVED IN RELOCATING (INSTALLING) THE AFFECTED UTILITY LINES. THE CONTRACTOR AND UTILITY(IES) ARE TO COOPERATE BY ARRANGING THEIR WORK IN SUCH A MANNER THAT INCONVENIENCE TO EITHER WILL BE HELD TO A MINIMUM.

ITEM 509 REINFORCING STEEL, REPLACEMENT OF EXISTING REINFORCING STEEL, AS PER PLAN:

REPLACE ALL EXISTING REINFORCING BARS DEEMED BY THE ENGINEER TO BE UNUSABLE BECAUSE OF CORROSION. THE DEPARTMENT WILL MEASURE THE REPLACEMENT REINFORCING STEEL BY THE NUMBER OF POUNDS ACCEPTED IN PLACE.

AN ALLOWANCE OF 100 POUNDS IS INCLUDED IN REINFORCING STEEL, REPLACEMENT OF EXISITING REINFORCING STEEL, AS PER PLAN, FOR THIS PURPOSE.

REPLACE ALL EXISTING REINFORCING STEEL BARS WHICH ARE TO BE INCORPORATED INTO THE NEW WORK AND ARE DEEMED BY THE ENGINEER TO BE MADE UNUSABLE BY CONCRETE REMOVAL OPERATIONS WITH NEW EPOXY COATED REINFORCING STEEL OF THE SAME SIZE AT NO COST TO THE DEPARTMENT.

ITEM 843 - PATCHING CONCRETE STRUCTURE WITH TROWELABLE MORTAR, AS PER PLAN:

THIS ITEM IS TO BE USED TO PATCH AREAS OF DETERIORATED OR UNUSABLE CONCRETE LESS THAN 2" THICK. THE FOLLOWING CONTINGENCY QUANTITIES ARE PROVIDED AND SHALL BE DIRECTED BY THE ENGINEER:

BRIDGE NO. MOT-75-1044R
1) REAR ABUTMENT FACE BELOW GIRDER #4 = 4 S.F.

BRIDGE NO. MOT-70-1130 L	=	56 S.F.
BRIDGE NO. MOT-70-1130 R	=	48 S.F.
BRIDGE NO. SHE-75-0614 L	=	48 S.F.
BRIDGE NO. SHE-75-0614 R	=	48 S.F.
BRIDGE NO. SHE-75-0888 L	=	48 S.F.
BRIDGE NO. SHE-75-0888 R	=	64 S.F.

AREAS OF DETERIORATED CONCRETE TO BE REPAIRED SHALL BE MARKED BY THE PROJECT ENGINEER. MATERIALS SHOULD NOT BE ORDERED UNTIL THE AREAS FOR REPAIR HAVE BEEN MARKED. THE ABOVE LISTED QUANTITIES ARE FOR INFORMATION ONLY AND THE CONTRACTOR WILL BE PAID FOR THE ACTUAL WORK COMPLETED AS MEASURED BY THE DEPARTMENT.

EXISTING STRUCTURE VERIFICATION:

DETAILS AND DIMENSIONS SHOWN ON THESE PLANS PERTAINING TO THE EXISTING STRUCTURE HAVE BEEN OBTAINED FROM PLANS OF THE EXISTING STRUCTURE AND FROM FIELD OBSERVATIONS AND MEASUREMENTS. CONSEQUENTLY, THEY ARE INDICATIVE OF THE EXISTING STRUCTURE AND THE PROPOSED WORK BUT THEY SHALL BE CONSIDERED TENTATIVE AND APPROXIMATE. THE CONTRACTOR IS REFERRED TO CMS SECTIONS 102.05, 105.02 AND 513.04.

BASE CONTRACT BID PRICES UPON A RECOGNITION OF THE UNCERTAINTIES DESCRIBED ABOVE AND UPON A PREBID EXAMINATION OF THE EXISTING STRUCTURE. HOWEVER, THE DEPARTMENT WILL PAY FOR ALL PROJECT WORK BASED UPON ACTUAL DETAILS AND DIMENSIONS WHICH HAVE BEEN VERIFIED IN THE FIELD.

ITEM 512 - SEALING OF CONCRETE SURFACES (EPOXY-URETHANE):

THE FOLLOWING CONCRETE SURFACES SHALL BE SEALED ACCORDING TO CMS SECTION 512:

MOT-40-1442:
1.THE REPLACEMENT CONCRETE ON THE BACKWALL AS SHOWN ON THE PLAN DETAILS.
2. THE ENTIRE SURFACE AREA OF THE NEW PORTION OF THE PARAPET.

MOT-70-1130R:
1. THE REPLACEMENT CONCRETE ON THE BACKWALL AS SHOWN ON THE PLAN DETAILS.

THE COLOR OF THE URETHANE COATING SHALL BE FEDERAL COLOR STANDARD NO. 17778 (LIGHT NEUTRAL).

ALL COST ASSOCIATED WITH THE ABOVE DESCRIBED WORK WILL BE PAID FOR UNDER ITEM 512 - SEALING OF CONCRETE SURFACES (EPOXY-URETHANE).

ITEM 202 - PORTIONS OF STRUCTURE REMOVED, OVER 20 FOOT SPAN, AS PER PLAN:

THIS ITEM SHALL INCLUDE THE ELEMENTS INDICATED IN THE PLANS AND GENERAL NOTES AND THAT ARE NOT SEPARATELY LISTED FOR PAYMENT, EXCEPT FOR WEARING COURSE REMOVAL. ITEMS TO BE REMOVED INCLUDE ALL EXISTING MATERIALS BEING REPLACED BY NEW CONSTRUCTION AND MISCELLANEOUS ITEMS THAT ARE NOT SHOWN TO BE INCORPORATED INTO THE FINAL CONSTRUCTION AND ARE DIRECTED TO BE REMOVED BY THE ENGINEER. THE USE OF EXPLOSIVES, HEADACHE BALLS AND/OR HOE-RAMS WILL NOT BE PERMITTED. THE METHOD OF REMOVAL AND THE WEIGHT OF HAMMER SHALL BE APPROVED BY THE ENGINEER. PERFORM ALL WORK IN A MANNER THAT WILL NOT CUT, ELONGATE OR DAMAGE THE EXISTING REINFORCING STEEL TO BE PRESERVED. CHIPPING HAMMERS SHALL NOT BE HEAVIER THAN THE NOMINAL 90-POUND CLASS. PNEUMATIC HAMMERS SHALL NOT BE PLACED IN DIRECT CONTACT WITH REINFORCING STEEL THAT IS TO BE RETAINED IN THE REBUILT STRUCTURE. SUBMIT CONSTRUCTION PLANS ACCORDING TO CMS 501.05.

THE REMOVAL OF ALL BEARINGS BEING REPLACED AND ANY CONCRETE REMOVAL TO MODIFY THE EXISTING BEAM SEATS ON BRIDGES SHE-75-0614L/R AND SHE-75-0888L/R SHALL BE PAID FOR UNDER ITEM 202 - PORTIONS OF STRUCTURE REMOVED, AS PER PLAN.

CUT LINE CONSTRUCTION JOINT PREPARATION:

SAW CUT BOUNDARIES OF PROPOSED CONCRETE REMOVALS 1 INCH DEEP. REMOVE CONCRETE TO A ROUGH SURFACE. LEAVE THE EXISTING REINFORCING STEEL, IF REQUIRED IN THE PLANS, IN PLACE. INSTALL DOWEL BARS IF SPECIFIED. PRIOR TO CONCRETE PLACEMENT ABRASIVELY CLEAN JOINT SURFACES AND EXISTING EXPOSED REINFORCEMENT TO REMOVE LOOSE AND DISINTEGRATED CONCRETE AND LOOSE RUST. THOROUGHLY CLEAN THE JOINT SURFACE AND EXPOSED REINFORCEMENT OF ALL DIRT, DUST, RUST OR OTHER FOREIGN MATERIAL BY THE USE OF WATER, AIR UNDER PRESSURE, OR OTHER METHODS THAT PRODUCE SATISFACTORY RESULTS. EXISTING REINFORCING STEEL DOES NOT HAVE TO HAVE A BRIGHT STEEL FINISH, BUT REMOVE ALL PACK AND LOOSE RUST. THOROUGHLY DRENCH EXISTING CONCRETE SURFACES WITH CLEAN WATER AND ALLOW TO DRY TO A DAMP CONDITION BEFORE PLACING CONCRETE.

ITEM 516 - RESET BEARING, AS PER PLAN:

THIS ITEM SHALL CONSIST OF ALL MATERIALS, LABOR AND EQUIPMENT NEEDED TO PERFORM THE TASKS AS DESCRIBED IN THE PLAN SHEETS. THIS WORK WILL BE PAID FOR UNDER ITEM 516 - RESET BEARING, AS PER PLAN.

ABBREVIATIONS:

THE FOLLOWING ABBREVIATIONS ARE USED THROUGHOUT THESE PLANS:

CJ = CONSTRUCTION JOINT
N.F. = NEAR FACE
F.F. = FAR FACE
E.F. = EACH FACE
PEJF = PREFORMED EXPANSION JOINT FILLER
T & B = TOP & BOTTOM
℄ = CENTERLINE
CLR = CLEAR
TYP = TYPICAL
EX = EXISTING
N.S. = NEAR SIDE
F.S. = FAR SIDE
BTM. = BOTTOM
BRG = BEARING

ITEM 519 - PATCHING CONCRETE STRUCTURES, AS PER PLAN:

PRIOR TO THE SURFACE CLEANING SPECIFIED IN 519.04 AND WITHIN 24 HOURS OF PLACING PATCHING MATERIAL, BLAST CLEAN ALL SURFACES TO BE PATCHED INCLUDING THE EXPOSED REINFORCING STEEL. ACCEPTABLE METHODS INCLUDE HIGH-PRESSURE WATER BLASTING WITH OR WITHOUT ABRASIVES IN THE WATER, ABRASIVE BLASTING WITH CONTAINMENT, OR VACUUM ABRASIVE BLASTING.

THIS ITEM IS TO BE USED TO PATCH AREAS OF DETERIORATED CONCRETE 2" THICK OR GREATER. THE FOLLOWING CONTINGENCY QUANTITIES ARE APPROVED AND SHALL BE DIRECTED BY THE ENGINEER WHERE PATCHES EXCEED 2" IN DEPTH:

BRIDGE NO.	MOT-70-1130 L/R
ABUTMENTS	54 SQ. FT.

AREAS OF DETERIORATED CONCRETE TO BE REPAIRED SHALL BE MARKED BY THE PROJECT ENGINEER. MATERIALS SHOULD NOT BE ORDERED UNTIL THE AREAS FOR REPAIR HAVE BEEN MARKED. THIS ITEM SHALL NOT BE USED TO PATCH THE UNDERSIDE OF DECKS.

ITEM SPECIAL - STRUCTURE, MISC.: GENERAL SUBSTRUCTURE MAINTENANCE:

THIS ITEM SHALL INCLUDE ALL WORK NECESSARY TO REMOVE DEBRIS FROM THE ABUTMENT SEATS AND PIER SEATS BELOW EXPANSION JOINTS FOR EACH SUBSTRUCTURE UNIT SUBJECT TO REHABILITATION EFFORTS SHOWN IN THESE PLANS. ALL WORK SHALL BE TO THE SATISFACTION OF THE ENGINEER. PAYMENT FOR ALL THE ABOVE DESCRIBED LABOR, EQUIPMENT AND MATERIALS WILL BE MADE AT THE CONTRACT PRICE BID FOR ITEM SPECIAL - STRUCTURE MISC.: GENERAL SUBSTRUCTURE MAINTENANCE.

THE FOLLOWING STRUCTURES SHALL BE AFFECTED BY THIS WORK:

MOT-40-1442 (US 40 OVER AIRPORT ACCESS ROAD)
MOT-40-1081 (US 40 OVER ENGLEWOOD DAM SPILLWAY)
MOT-70-1130 L/R (I-70 OVER S.R. 48)
MOT-75-1044 (I-75 OVER THE GREAT MIAMI RIVER)
MOT-675-0055L (I-675 RAMP 'S' WESTBOUND OVER I-75)
SHE-29-1744 (SR 29 "COURT ST." OVER THE GREAT MIAMI RIVER)
SHE-75-0614 L/R (I-75 OVER CAMPBELL ROAD)
SHE-75-0888 L/R (I-75 OVER B&O RAILROAD)

ITEM 516 - ELASTOMERIC BEARING WITH INTERNAL LAMINATES AND LOAD PLATE (NEOPRENE), AS PER PLAN

THIS ITEM SHALL CONSIST OF ALL MATERIALS, LABOR, AND EQUIPMENT NEEDED TO PERFORM THE TASKS AS DESCRIBED IN THE PLAN SHEETS. THIS ITEM SHALL ALSO INCLUDE ALL MATERIALS, LABOR, AND EQUIPMENT NEEDED TO CLEAN THE STEEL GIRDER ENDS OF DEBRIS AND DUST. PAINT AND RUST IN THE AREA OF THE BEARING SHALL BE REMOVED BY WAY OF TOOLING, GRINDING OR SAND BLASTING PRIOR TO WELDING. THIS WORK SHALL BE PAID FOR UNDER ITEM 516 - ELASTOMERIC BEARING WITH INTERNAL LAMINATES AND LOAD PLATE (NEOPRENE), AS PER PLAN.

ITEM 516 - JACKING AND TEMPORARY SUPPORT OF SUPERSTRUCTURE, AS PER PLAN:

THIS WORK CONSISTS OF RAISING OR RE-POSITIONING EXISTING STRUCTURES TO THE DIMENSIONS AND REQUIREMENTS DEFINED IN THE PROJECT PLANS.

SUBMIT CONSTRUCTION PLANS IN ACCORDANCE WITH CMS 501.05

DURING JACKING FOR BEARING REHABILITATION, THE CONTRACTOR SHALL RAISE ALL OF THE BEARINGS AT ANY SUBSTRUCTURE UNIFORMLY AND SIMULTANEOUSLY TO PREVENT DAMAGE FROM DIFFERENTIAL GIRDER DEFLECTIONS. DIFFERENTIAL GIRDER DEFLECTIONS SHALL BE LIMITED TO 1/4". THE CONTRACTOR SHALL LIMIT THE MAXIMUM JACKING HEIGHT FOR ALL BEARINGS TO 1/2" UNLESS NOTED OTHERWISE.

THE CONTRACTOR SHALL ENSURE THAT THERE IS A MINIMUM OF 6" BETWEEN THE FACE OF BEARING AND THE FACE OF ABUTMENT TO ALLOW ROOM FOR PLACEMENT OF THE HYDRAULIC JACK BELOW THE BEAM FLANGE. IF THIS REQUIREMENT IS NOT MET THEN THE CONTRACTOR SHALL SUBMIT AN ALTERNATE JACKING METHOD TO THE ENGINEER (I.E. TEMPORARY STEEL BENT ANCHORED TO THE FACE OF THE EXISTING ABUTMENT). THE ALTERNATE JACKING METHOD SHALL BE DESIGNED AND STAMPED BY AN ENGINEER REGISTERED IN THE STATE OF OHIO. A MINIMUM OF TWO SETS OF STAMPED PLANS AND CALCULATIONS SHALL BE SUBMITTED TO THE ENGINEER AT LEAST FIFTY DAYS PRIOR TO THE START OF REHABILITATION WORK.

IF, DURING THE JACKING OPERATIONS, CRACKING OF THE CONCRETE SUPERSTRUCTURE, SEPARATION OF THE CONCRETE DECK FROM THE STEEL STRINGERS, OR OTHER DAMAGE TO THE STRUCTURE IS VISUALLY OBSERVED, IMMEDIATELY CEASE THE JACKING OPERATION AND INSTALL SUPPORTS TO THE SATISFACTION OF THE ENGINEER. ANALYZE THE DAMAGE AND SUBMIT A METHOD OF CORRECTION TO THE ENGINEER FOR APPROVAL. EPOXY INJECT ALL BEAMS THAT SEPARATE FROM THE DECK FOR THE DISTANCE OF THE SEPARATION IN ACCORDANCE WITH CMS 512.07. THE DEPARTMENT WILL NOT PAY FOR THE COST OF THIS EPOXY INJECTION OR OTHER REQUIRED REPAIRS. THE BRIDGE BEARINGS SHALL BE FULLY SEATED AT ALL CONTACT AREAS. IF FULL SEATING IS NOT ATTAINED, SUBMIT A REPAIR PLAN TO THE ENGINEER. THE DEPARTMENT WILL NOT PAY FOR THE REPAIR COSTS TO ENSURE FULL SEATING ON BEARINGS.

DAMAGE TO ANY PORTION OF THE STRUCTURE OR TO ANY UTILITIES AS A RESULT OF THE JACKING AND/OR BRIDGE REHABILITATION SHALL BE REPAIRED AT THE CONTRACTOR'S EXPENSE.

THE DEPARTMENT WILL MEASURE THIS WORK ON A LUMP SUM BASIS.

THE DEPARTMENT WILL PAY FOR THE ACCEPTED QUANTITIES AT THE CONTRACT PRICE FOR ITEM 516, JACKING AND TEMPORARY SUPPORT OF SUPERSTRUCTURE, AS PER PLAN.

ITEM 516 - REFURBISH BEARING DEVICE, AS PER PLAN

THIS ITEM SHALL CONSIST OF ALL MATERIALS, LABOR, AND EQUIPMENT NEEDED TO PERFORM THE TASKS AS DESCRIBED IN THE PLAN SHEETS. THIS WORK WILL BE PAID FOR UNDER ITEM SPECIAL - REFURBISH BEARING DEVICE, AS PER PLAN.

ITEM SPECIAL - STRUCTURE, MISC.:VANDAL FENCE REPAIR, AS PER PLAN

THIS ITEM SHALL CONSIST OF ALL MATERIALS, LABOR, AND EQUIPMENT NEEDED TO PERFORM THE TASKS AS DESCRIBED IN THE PLAN SHEETS. THIS WORK WILL BE PAID FOR UNDER ITEM SPECIAL - VANDAL FENCE REPAIR, AS PER PLAN.

ITEM 516 - STRUCTURAL EXPANSION JOINT INCLUDING ELASTOMERIC STRIP SEAL, AS PER PLAN

THIS ITEM SHALL CONSIST OF ALL MATERIALS, LABOR, AND EQUIPMENT NEEDED TO PERFORM THE TASKS AS DESCRIBED IN THE PLAN SHEETS. THIS ITEM SHALL ALSO INCLUDE ALL MATERIALS, LABOR, AND EQUIPMENT NEEDED TO EXTEND THE EXPANSION JOINT INTO THE PARAPET PER STANDARD DRAWING EXJ-4-87. THIS WORK WILL BE PAID FOR UNDER ITEM 516 - STRUCTURAL EXPANSION JOINT INCLUDING ELASTOMERIC STRIP SEAL, AS PER PLAN.

DESIGN AGENCY
M-E COMPANIES

DESIGNED	DRAWN	REVIEWED	DATE
CAH	CAH	JDH	12/10/08
CHECKED	REVISED	STRUCTURE FILE NUMBER	
SRB		VARIES	

GENERAL NOTES
BRIDGE No: VARIES

D07-BH-FY2009
PID No. 83358

1/3

IN-WATER WORK RESTRICTED

NO CONSTRUCTION MATERIALS OR EQUIPMENT MAY ENTER THE WATERWAY AT ANY TIME AS PART OF THE PROJECT.

CONTROL OF SPILLS

BEST CONSTRUCTION PRACTICES ARE TO BE IMPLEMENTED TO MINIMIZE WATER QUALITY IMPACTS. A SPILL CONTAINMENT KIT IS TO BE MAINTAINED ON-SITE THROUGHOUT CONSTRUCTION ACTIVITIES. SPILLS OF FUELS, OILS, CHEMICALS, OR OTHER MATERIALS WHICH COULD POSE A THREAT TO GROUNDWATER SHALL BE CLEANED UP IMMEDIATELY. IF THE SPILL IS A REPORTABLE AMOUNT, THE LOCAL FIRE DEPARTMENT IS TO BE CONTACTED.

INSPECTION OF BRIDGES FOR BATS

PRIOR TO ANY WORK ON THE EXISTING BRIDGE, THE UNDERSIDE OF THE BRIDGE SHOULD BE CAREFULLY EXAMINED FOR THE PRESENCE OF BATS, ESPECIALLY FROM APRIL 1 TO SEPTEMBER 30. IF ANY BATS ARE FOUND ROOSTING ON THE UNDERSIDE OF THE BRIDGE, CONTACT THE U.S. FISH & WILDLIFE SERVICE AT 614-469-6923. THIS REQUIREMENT IS FOR INFORMATION GATHERING PURPOSES ONLY AND WILL NOT RESULT IN THE DELAY OF THE PROJECT.

UTILITIES

EXISTING UTILITY INFORMATION IS FROM THE BEST AVAILABLE RECORDS. THE CONTRACTOR SHALL CALL THE OHIO UTILITIES PROTECTION SERVICES (1-800-362-2764) 72 HOURS PRIOR TO CONSTRUCTION AND SHALL NOTIFY ALL UTILITY COMPANIES AT LEAST 48 HOURS PRIOR TO WORK IN THE VICINITY OF THEIR FACILITIES.

LISTED BELOW ARE ALL UTILITIES LOCATED WITHIN THE PROJECT CONSTRUCTION LIMITS TOGETHER WITH THEIR RESPECTIVE OWNERS:

ELECTRIC: DAYTON POWER AND LIGHT DPL INC. P.O. BOX 1247 DAYTON, OH 45401-1247 PHONE: 937-331-4860	WATER & SEWER: CITY OF DAYTON 320 W. MONUMENT AVE. DAYTON, OH 45402 PHONE: 937-333-3725
TRAFFIC COORDINATION: CITY OF DAYTON CONTACT: JOHN ZELINSKI PHONE: 937-333-4087	TROLLEY SERVICE GREATER DAYTON REGIONAL TRANSIT AUTHORITY (RTA) CONTACT: RANDY FOGLE PHONE: 937-425-8531 OR CONTACT: PETE TRICK PHONE: 937-425-8536

CONTRACTOR TO VERIFY THE LOCATION OF THE UNDERGROUND UTILITIES AS OBTAINED FROM THE OWNERS AS REQUIRED BY SECTION 153.64 O.R.C.

OEPA NOTIFICATION OF DEMOLITION AND RENOVATION

THE OEPA NOTIFICATION OF DEMOLITION AND RENOVATION FORMS SHALL BE COMPLETED AND SUBMITTED BY THE CONTRACTOR TO THE REGIONAL AIR POLLUTION CONTROL AGENCY IN DAYTON AT LEAST 10 WORKING DAYS IN ADVANCE OF THE START OF DEMOLITION. THE NOTIFICATION REQUIREMENT IS LISTED IN THE SPECIAL PROVISIONS BOX ON THE PLAN TITLE SHEET AND THE FORMS ARE INCLUDED IN SPECIAL PROVISIONS PACKAGE FOR THE PROJECT.

ITEM 511 - CONCRETE, MISC.: CLASS FS CONCRETE

CONCRETE SHALL BE IN ACCORDANCE WITH CMS 499.

ITEM 513 - STRUCTURAL STEEL, MISC.: STEEL PREPARATION, INSPECTION, AND NDT:

THIS ITEM CONSISTS OF INSPECTING THE EXISTING WELDS. (FOR LOCATIONS, SEE SHEETS 6-19 OF 20.)

1. GRINDING MAY BE DIRECTED BY THE ENGINEER TO ENHANCE INVESTIGATION FOR CRACK PRESENCE. ALL GRINDING MUST BE DONE CAUTIOUSLY ESPECIALLY IN TENSION ZONES.

2. THE CONTRACTOR SHALL PERFORM NON-DESTRUCTIVE TESTING (NDT) IN THE AREA USING MAGNETIC PARTICLE EXAMINATION AND/OR DYE PENETRANT SO THAT THE ENGINEER MAY FURTHER INSPECT FOR CRACKS. CONTRACTOR'S PERSONNEL PERFORMING NDT SHALL BE QUALIFIED AS PER 513.25 OF THE CMS.

3. ALL CRACKS, CRACK TIPS AND CRACK TACK WELDS SHALL BE REMOVED ACCORDING TO AND PAID FOR UNDER ITEM 513 - STRUCTURAL STEEL, MISC.: CRACK REPAIR.

4. PERFORM STEPS 1 THROUGH 3 FOR EVERY MARKED SUSPECTED CRACK LOCATION. THE CONTRACTOR SHALL INFORM THE PROJECT ENGINEER OF ANY OBSERVED CRACKS NOT LISTED ON THE CONTRACT PLANS.

THE ACCEPTED NUMBER OF NDT LOCATIONS AS DESCRIBED IN THE NOTE WILL BE PAID FOR AT THE CONTRACT UNIT PRICE PER LOCATION. PER LOCATION INCLUDES BOTH SIDES OF THE WEB AND BOTH SIDES OF THE STIFFENER. THE PRICE AND PAYMENT SHALL BE FULL COMPENSATION FOR FURNISHING ALL MATERIAL, LABOR, AND EQUIPMENT NECESSARY TO CLEAN, GRIND, AND PERFORM NDT ON BOTH SIDES OF THE SUSPECTED CRACK LOCATION. THE CONTRACTOR SHALL DEMONSTRATE TO THE ENGINEER PRIOR TO THE START OF THE WORK THAT HE CAN SATISFACTORILY CLEAN THE METAL IN ACCORDANCE WITH SSPC-SP11 (ELEVEN).

NOTE: THE PROJECT ENGINEER SHALL INSPECT EACH LOCATION DESIGNATED ON THE PLANS VISUALLY FOR CRACKS BEFORE ANY WORK AT THAT LOCATION BEGINS. THE CONTRACTOR SHALL PROVIDE A SAFE AND SUITABLE MEANS OF ACCESS TO ALL AREAS FOR INSPECTION PURPOSES IN ACCORDANCE WITH 105.10 OF THE CMS.

THE CONTRACTOR SHALL CLEAN UP ANY MATERIAL THAT MAY FALL TO THE GROUND &/OR ONTO THE BOTTOM GIRDER FLANGE AS A RESULT OF THIS WORK.

ALL COSTS ASSOCIATED WITH THE ABOVE DESCRIBED WORK SHALL BE PAID UNDER THE CONTRACT PRICE BID UNDER ITEM 513, EACH - STRUCTURAL STEEL, MISC.: STEEL PREPARATION, INSPECTION, AND NDT.

ITEM 513 - STRUCTURAL STEEL MEMBERS, LEVEL UF, AS PER PLAN

THIS ITEM CONSISTS OF ALL MATERIALS, LABOR, AND EQUIPMENT NEEDED TO CONSTRUCT AND INSTALL THE BEARING RETAINERS AS DESCRIBED IN THE PLAN SHEETS. THIS WORK WILL BE PAID FOR UNDER ITEM 513 - STRUCTURAL STEEL MEMBERS, LEVEL UF, AS PER PLAN.

ITEM 513 - STRUCTURAL STEEL, MISC.: CRACK REPAIR

THIS WORK SHALL CONSIST OF DRILLING AT THE ENDS OF CRACKS, GRINDING, WELDING, AND NON-DESTRUCTIVE TESTING AS DIRECTED BY THE ENGINEER. THIS WORK SHALL INCLUDE WEB TO FLANGE AND STIFFENER TO WEB CONNECTIONS. NO HOLES SHALL BE DRILLED WITHOUT THE APPROVAL OF THE ENGINEER.

HOLES SHALL BE DRILLED TO REMOVE ENTIRE CRACKS OR THE APPARENT ENDS OF THE SUSPECTED CRACKS REVEALED BY THE NDT DETAILED IN THESE PLANS UNDER ITEM 513 - STRUCTURAL STEEL, MISC.: STEEL PREPARATION, INSPECTION, AND NDT. THE EXPOSED CIRCUMFERENCE OF EACH DRILLED HOLE SHALL BE GROUND SMOOTH PER 513.12 TO MEET THE REQUIREMENTS FOR PIN HOLES AND CAREFULLY INSPECTED FOR CRACKS USING MAGNETIC PARTICLE EXAMINATION AND/OR DYE PENETRANT. DRILLING, GRINDING, AND TESTING SHALL CONTINUE UNTIL ALL CRACK ENDS ARE REMOVED. WHEN NO CRACKS ARE DETECTED AT A LOCATION, NO HOLES SHALL BE DRILLED.

THE CENTER OF THE HOLE SHALL BE POSITIONED BEYOND THE VISIBLE END OF THE CRACK SO THAT THE EDGE OF THE HOLE COINCIDES WITH THE END OF THE CRACK. IF THE CRACK ON ONE SIDE OF THE MEMBER IS LONGER THAN ON THE OTHER SIDE, THE HOLE SHALL BE POSITIONED RELATIVE TO THE LONGEST CRACK. FLAME CUTTING OF HOLES IS NOT PERMITTED UNDER ANY CIRCUMSTANCES.

SINCE ANY OF THESE CRACKS COULD PROPAGATE INTO THE TENSION ZONES, REMOVING THEIR END IS IMPERATIVE. CRACKS LESS THAN 2" LONG, CRACKED AREAS, OR DEFECTS LESS THAN 2" IN DIAMETER SHALL BE REMOVED BY A SINGLE 2" HOLE WHEN PRACTICAL. ENDS OF CRACKS LONGER THAN 2" SHALL BE END DRILLED WITH 2" DIAMETER HOLES. HOLES SHALL BE CAREFULLY EXAMINED FOR CRACKS IN THE PLANE OF THE PLATE. TWO $\frac{1}{2}$" DIAMETER HOLES MAY BE DRILLED ONLY WHERE THE PROXIMITY OF THE CRACK AND THE ADJACENT STEEL PRECLUDES DRILLING A 2" DIAMETER HOLE.

THE LOCATION OF ALL HOLES SHALL BE DETERMINED BY THE DISTRICT BRIDGE ENGINEER &/OR HIS ON SITE REPRESENTATIVE AND DRILLED UNDER THE ENGINEER'S DIRECTION. IF THE CRACK IS CONTAINED ENTIRELY IN THE WELD MATERIAL, DRILLING OF HOLES AT THE CRACK ENDS WILL NOT BE PERFORMED, THE WELD SHALL BE GROUND OFF AND THEN RE- WELDED. CARE SHALL BE TAKEN NOT TO GRIND INTO THE BEAM FLANGE. BEFORE ANY DRILLING TAKES PLACE, THE ENGINEER SHALL BE NOTIFIED AND CONSENT GIVEN.

AFTER DRILLING OUT THE ENDS OF THE CRACKS THAT ARE LOCATED IN THE WELD, THE INTERMEDIATE WELD SHOULD BE GROUND OFF AND RE- WELDED WITH A WELD AREA EQUAL TO THAT REMOVED. AFTER DRILLING OUT THE ENDS OF THE CRACKS THAT ARE LOCATED IN THE BASE METAL, WELD ALONG THE ENTIRE LENGTH OF THE CRACK IN THE BASE METAL ON BOTH SIDES OF THE WEB AS APPLICABLE.

THE ACCEPTED NUMBER OF HOLES DRILLED IN THE STRUCTURAL STEEL AS DETAILED ABOVE WILL BE PAID FOR AT THE CONTRACT BID PRICE PER REPAIR LOCATION, WHICH PRICE AND PAYMENT SHALL BE FULL COMPENSATION FOR FURNISHING ALL MATERIAL, LABOR, AND EQUIPMENT NECESSARY FOR DRILLING HOLES, GRINDING, AND NON-DESTRUCTIVE TESTING ON BOTH SIDES OF EACH HOLE.

ONCE THE REPAIR IS COMPLETED, THE CONTRACTOR SHALL PERFORM ANOTHER ROUND OF NDT TO CONFIRM THE ARREST OF THE CRACK PROPAGATION.

ALL COSTS ASSOCIATED WITH THE ABOVE DESCRIBED WORK SHALL BE PAID UNDER : ITEM 513, EACH - STRUCTURAL STEEL, MISC.: CRACK REPAIR. CONTRACTOR WILL BE PAID ONLY FOR WORK COMPLETED, ESTIMATED QUANTITIES ARE FOR INFORMATION ONLY.

THE CONTRACTOR SHALL CLEAN UP ANY MATERIAL THAT MAY FALL TO THE GROUND &/OR ONTO THE BOTTOM GIRDER FLANGE AS A RESULT OF THIS WORK.

REPAIRS DEEMED UNACCEPTABLE BY THE ENGINEER SHALL BE RE-DONE AT THE CONTRACTOR'S EXPENSE.

ITEM 514 - FIELD PAINTING OF DAMAGED STRUCTURAL STEEL, AS PER PLAN

THIS ITEM CONSISTS OF FIELD PAINTING DAMAGED STRUCTURAL STEEL FROM THE CRACK REPAIR PROCEDURES BY PERFORMING SURFACE PREPARATION AND APPLYING A THREE-COAT PAINT SYSTEM TO THE UNCOATED STEEL AND FEATHERED REMOVAL AREAS OF EXISTING COATING.

CMS 514.06 THROUGH 514.10 APPLY. REMOVE EXISTING PAINT COATING AS DIRECTED BY THE ENGINEER ACCORDING TO SSPC-SP 15, COMMERCIAL GRADE POWER TOOL CLEANING, OR EQUAL AS SHOWN ON THE PICTORIAL SURFACE PREPARATION STANDARDS FOR PAINTING STEEL SURFACES SHOWN IN SSPC-VIS 3. THE ENGINEER WILL USE THE CONTRACTOR PROVIDED SSPC-VIS 3 TO DETERMINE THE ACCEPTANCE OF THE COMMERCIAL GRADE POWER TOOL CLEANING. FEATHER THE EXISTING PAINT TO EXPOSE A MINIMUM OF $\frac{1}{2}$ INCH OF EACH COAT. CONTAIN AND DISPOSE OF WASTE GENERATED BY THE CLEANING ACCORDING TO CMS 514.13.D. TESTING REQUIREMENTS PER CMS 514.13.D SHALL BE INVOKED ONLY IF AN ACCEPTABLE AMOUNT, AS DETERMINED BY THE ENGINEER, OF WASTE MATERIAL IS GENERATED BY THE REPAIRS.

ROUND ALL EXPOSED CORNERS OF MAIN MATERIAL AS NECESSARY TO ACHIEVE A $\frac{1}{16}$ INCH RADIUS OR EQUIVALENT FLAT SURFACE AT A 45 DEGREE ANGLE.

APPLY THE PRIME, INTERMEDIATE AND FINISH COATS OF THE SPECIFIED THREE-COAT PAINT SYSTEM, CMS 708.02, ACCORDING TO CMS 514.15, 514.16, 514.17, AND 514.20 TO CONTRACT LIMITS OR AS DIRECTED BY THE ENGINEER. TINT THE INTERMEDIATE COAT TO APPROXIMATELY THE SAME COLOR AS THE EXISTING FINISH COLOR. MATCH THE COLOR TO THE ENGINEER'S SATISFACTION. THE ENGINEER WILL DETERMINE THE PRIME COAT THICKNESS; PRIME AND INTERMEDIATE COAT THICKNESS; AND THE TOTAL (PRIME + INTERMEDIATE +FINISH COAT) THICKNESS USING TYPE 2 MAGNETIC GAGE AT SPOT LOCATIONS PER CMS 514.05. EACH COAT OF PAINT SHALL MEET THE MINIMUM DRY FILM THICKNESS REQUIREMENTS OF CMS 514.20. APPLY PAINT AS FOLLOWS:

A. APPLY THE PRIME COAT ONLY TO THE SURFACE OF THE BARE STEEL AND THE EXISTING PRIME COAT EXPOSED BY FEATHERING. DO NOT APPLY THE PRIME COAT TO THE ADJACENT INTERMEDIATE COAT.

B. APPLY THE INTERMEDIATE COAT ONLY TO THE NEW PRIME COAT AND THE EXISTING INTERMEDIATE COAT EXPOSED BY FEATHERING. DO NOT APPLY THE INTERMEDIATE COAT TO THE ADJACENT FINISH COAT.

C. APPLY THE FINISH COAT ONLY TO THE NEW INTERMEDIATE COAT. DO NOT APPLY THE FINISH COAT TO THE ADJACENT EXISTING FINISH COAT.

AT THE PERIMETER OF THE REPAIR AREA, APPLY THE PRIME AND INTERMEDIATE COATS USING A BRUSH. APPLY THE FINISH COAT USING EITHER BRUSH OR SPRAY. IN LIEU OF BRUSHING, THE USE OF MASKING AREAS NOT TO BE COATED AND SPRAY TO FEATHERED REMOVAL LINES MAY BE PERFORMED.

BLEND REPAIR AREAS WITH THE ADJACENT COATING AND PROVIDE A FINISHED SURFACE IN THE PATCHED AREAS THAT IS SMOOTH AND HAS AN EVEN PROFILE WITH THE ADJACENT SURFACE.

THE DEPARTMENT WILL MEASURE FIELD PAINTING OF DAMAGED STRUCTURAL STEEL, AS PER PLAN BY THE NUMBER OF SQUARE FEET OF STRUCTURAL STEEL PAINTED. ALL REQUIREMENTS OF THIS SPECIFICATION ARE CONSIDERED INCIDENTAL TO THE WORK. THE DEPARTMENT WILL DETERMINE THE SURFACE AREA BY TAKING EXACT FIELD MEASUREMENTS OF ALL PAINTED SURFACES AND CALCULATIONS.

ALL COSTS ASSOCIATED WITH THE ABOVE DESCRIBED WORK SHALL BE PAID UNDER : ITEM 514, SQUARE FEET - FIELD PAINTING OF DAMAGED STRUCTURAL STEEL, AS PER PLAN. CONTRACTOR WILL BE PAID ONLY FOR WORK COMPLETED AND ACCEPTED. ESTIMATED QUANTITIES ARE FOR INFORMATION PURPOSES ONLY.

REPAIRS DEEMED UNACCEPTABLE BY THE ENGINEER SHALL BE RE-DONE AT THE CONTRACTOR'S EXPENSE.

DESIGN AGENCY: M-E COMPANIES
DESIGNED ARH | DRAWN SRB | REVIEWED DCB | DATE 12/10/08
CHECKED CAH | REVISED | STRUCTURE FILE NUMBER VARIES
GENERAL NOTES
BRIDGE No: VARIES
D07-BH-FY2009
PID No. 83358

J:\TS\07\07-229 ODOT District 7 GES\80631\structures\7a-7e Combined\7AE_GN002.dgn 1/8/2009 8:40:44 AM arhayes ODOT_MS_PDF_FULL.plt ODOT_MS_PENTABLE.tbl M-E Companies, Inc.

PROPOSED WORK SUMMARY:

MOT-40-1442 (SFN 5703409) OVER AIRPORT ACCESS ROAD

- RESET FIVE FORWARD ABUTMENT BEARINGS
- WELD ON ROCKER BEARING END CAPS WHERE MISSING. (ESTIMATE OF 16 NEEDED)
- EXTEND SCUPPERS 8" MINIMUM BELOW BOTTOM OF BEAMS - (THIS WORK WILL REQUIRE A SHOULDER CLOSURE ON AIRPORT ACCESS ROAD)
- REMOVE TOP 12" OF BACKWALL AND REPLACE STRIP SEAL JOINT GLAND, STRIP SEAL RETAINER FOR BACKWALL AND "CHEESE" PLATE ANCHOR AT BACKWALL. REPAIRS TO BE CARRIED OUT AT FORWARD ABUTMENT ONLY AND FROM CENTER OF PAVEMENT TO LEFT FORWARD PARAPET. BOND NEW PORTION OF STRIP SEALTO EXISTING AT CENTER OF DECK PER MANUFACTURER'S SPECIFICATIONS. (BACKWALL WORK TO BE COMPLETED OVER A WEEKEND USING FAST SET CONCRETE.)
- REMOVE EXISTING CONCRETE FOR PARAPET/GUARDRAIL TRANSITION AT LEFT FORWARD ABUTMENT DOWN TO TOP OF WINGWALL AND REPLACE IN KIND FOR "TURNED UP" PORTION OF STRIP SEAL REPAIR.
- REPAIR LOOSE VANDAL FENCE POST BOLT CONNECTIONS TO PARAPET AT RIGHT REAR ABUTMENT. REMOVE EXISTING BOLTS, REMOVE ANY REMAINING ANCHOR ADHESIVE FROM EXISTING BOLT HOLES, AND INSTALL CLEAN BOLTS USING NEW ANCHOR ADHESIVE. THE FIRST FOUR FENCE POSTS SHALL BE REPAIRED.

MOT-40-1081 (SFN 5703255) OVER ENGLEWOOD DAM SPILLWAY

- REFURBISH AND RESET ALL FIVE BEARINGS AT THE PIER AND ALL FIVE BEARINGS AT THE FORWARD ABUTMENT.
- REFURBISHED BEARINGS SHALL BE REPAINTED TO MATCH EXISTING.

MOT-70-1130 L/R (SFN 5705525/5705495) OVER S.R. 48

- REMOVE BROKEN CONCRETE IN HOLE IN LEFT BRIDGE REAR BACKWALL.
- REMOVE EXISTING SIGN SUPPORT ANGLE AND CONNECTION TAB.
- REPLACE EXISTING SLIDING BEARINGS WITH ELASTOMERIC BEARINGS W/ LOAD PLATES.
- EXISTING BEARING SEATS ARE NOT LEVEL IN SOME LOCATIONS. CLEAN SEAT AND PLACE A LEVELING GROUT TO CORRECT THE PROBLEM.
- REPAIR ONE BROKEN END DAM CROSS FRAME AT EACH BRIDGE.
- REMOVE A PORTION OF BACK WALL AND APPROACH SLAB ROUGHLY 3'-0" WIDE BY 4" DEEP FROM CENTER OF DECK TO THE FACE OF PARAPET AND REPAIR WITH CLASS C. CONCRETE (DECK JOINT WORK TO BE COMPLETED OVER A WEEKEND.)
- REPLACE DAMAGED PORTION OF EXPANSION JOINT STRIP SEAL AS INDICATED ON THE PLANS.
- PERFORM SPOT PAINTING ON DAMAGED STEEL AND ANY STEEL REPAIR AREAS.

MOT-75-1044 L/R (SFN 5707056) OVER GREAT MIAMI RIVER

- RESET BEARING FOR BEAM #7 AT LEFT BRIDGE REAR ABUTMENT
- PATCH SPALL ON BEAM SEAT AT BEAM #4 AT RIGHT BRIDGE REAR ABUTMENT.

MOT-675-0055 L (SFN 5710707) I-675 WEST OVERHEAD RAMP TO I-75 SOUTHBOUND

- RESET ALL BEARINGS AT PIER #1, PIER #3 AND FORWARD ABUTMENT.

SHE-29-1744 (SFN 7500254) SR 29 (COURT ST.) OVER GREAT MIAMI RIVER

- RESET BOX BEAM BEARING ELASTOMERIC BEARING PADS FOR NORTH ABUTMENT.
- REMOVE STATIONARY SIDEWALK EXPANSION JOINT COVER PLATES TO ACCOMMODATE BRIDGE JACKING. REPLACE COVER PLATES AFTER JACKING OPERATION IS COMPLETED.
- MAXIMUM JACKING HEIGHT LIMITED TO 1/4" TO PREVENT DAMAGE TO SIDEWALK CONDUITS. ALL BOX BEAMS TO BE LIFTED SIMULTANEOUSLY.
- CONTRACTOR SHALL CLEAN EXISTING EXPANSION JOINT FILLER FROM STRIP SEAL EXPANSION JOINT BUT SHALL TAKE CARE NOT TO DAMAGE STRIP SEAL GLAND IN THE PROCESS.
- ANY DAMAGE TO STRIP SEAL GLAND DURING CLEANING OR ANY DAMAGE TO CONDUITS AS A RESULT OF THE JACKING PROCESS SHALL BE REPAIRED AT THE CONTRACTOR'S EXPENSE.
- CLEAN BEARING SEAT OF DEBRIS DURING BEARING RESET.
- TWO POSSIBLE JACKING METHODS:

  PREFERRED METHOD:
  DETERMINE IF A SMALL ENOUGH "PANCAKE" HYDRAULIC JACK CAN BE PLACED BETWEEN THE TWO ELASTOMERIC BEARING PADS PROVIDED AT THE END OF EACH BEAM. PLACE THE HYDRAULIC JACK ON THE EXISTING ABUTMENT SEAT AND JACK THE BRIDGE FROM THERE.

  ALTERNATE METHOD:
  EXPOSE TOE OF ABUTMENT AND CONSTRUCT A TEMPORARY STEEL HEADER BEAM AND BENT ON WHICH TO PLACE THE HYDRAULIC JACKS. DETERMINE THE LENGTH OF THE EXISTING END BEAM DIAPHRAGM TO ENSURE THAT HYDRAULIC JACK DOES NOT PUNCH THROUGH A BOX BEAM VOID. TEMPORARY BENT SHALL BE ANCHORED TO THE ABUTMENT. SUBMIT PLANS PER CMS 501.05.

- CONSTRUCT A BEARING RETAINER LATERALLY ACROSS THE ENTIRE NORTH ABUTMENT BEARING SEAT TO PREVENT FUTURE BEARING PAD MOVEMENT. RETAINER TO BE CONSTRUCTED FROM A STEEL ANGLE. ONE LEG BOLTED TO THE FACE OF THE ABUTMENT AND THE OTHER LEG EXTENDING BACK LEVEL WITH THE BEAM SEAT AT LEAST ONE INCH AND BRACED AGAINST THE BEARING PADS TO PREVENT MOVEMENT OF THE PADS. RETAINER TO BE PLACED AT NORTH ABUTMENT ONLY. BEARING RETAINER SHALL BE GALVANIZED STEEL AND SHALL BE PAID UNDER ITEM 513 - STRUCTURAL STEEL MEMBERS, LEVEL UF, AS PER PLAN.

THE CONTRACTOR IS REFERRED TO THE FOLLOWING WEBSITE: HTTP://WWW.DUDGEONJACKS.COM/LOW_PROFILE_PANCAKES.HTM FOR LOW PROFILE HYDRAULIC JACKS.

UNLESS PAID FOR UNDER OTHER ITEMS, ALL COSTS ASSOCIATED WITH THE PROPOSED WORK SHALL BE PAID UNDER THE CONTRACT PRICE BID UNDER ITEM 516 - RESET BEARINGS, AS PER PLAN.

SHE-75-0614 L/R (SFN 7501773/7501803) I-75 OVER CAMPBELL RD.

- REPLACE ALL EXISTING ABUTMENT SLIDING BEARINGS FOR BOTH BRIDGES WITH ELASTOMERIC BEARING PADS WITH STEEL LOAD PLATES.

SHE-75-0888 L/R (SFN 7501986/7502044) I-75 OVER B&O RAILROAD

- REPLACE ALL EXISTING ABUTMENT SLIDING BEARINGS FOR BOTH BRIDGES WITH ELASTOMERIC BEARING PADS WITH STEEL LOAD PLATES.
- REPAIR CRACKED WELDS AT CONNECTION OF END DAM CROSSFRAME ANGLES TO BEAM WEB. MULTIPLE LOCATIONS, LEFT BRIDGE ONLY.
- GRIND OUT NICKS IN JOINT ARMOR OF THE RIGHT BRIDGE.
- PERFORM SPOT PAINTING TO PROTECT REPAIR AREA.

FATIGUE CRACK REPAIR WORK: (BREAKDOWN EACH BRIDGE)

THIS WORK SHALL CONSIST OF THE FOLLOWING:

- TEMPORARY RELOCATION OF THE RTA UTILITY LINES AND SHIELDING CHANNELS MOUNTED TO THE GIRDER BOTTOM FLANGES TO AVOID INTERFERENCE WITH PROPOSED NON-DESTRUCTIVE TESTING (NDT), REPAIR AND PAINTING.
- REMOVE GIRDER PAINT AND PERFORM NDT TO DETERMINE THE EXTENT OF FATIGUE CRACKING.
- DRILL HOLES IN GIRDERS TO ARREST CRACKS AND PERFORM WEB CRACK REPAIR WELDING.
- PERFORM NDT AGAIN TO ENSURE RAPAIR IS ACCEPTABLE.
- REMOVE OLD WELD AND REWELD CRACKS AT STIFFENER/ FLANGE CONNECTION(S).
- PERFORM SPOT PAINTING TO PROTECT REPAIR AREA.
- RESET RTA UTILITY LINES AND SHIELDING CHANNELS TO THEIR ORIGINAL LOCATION.

BRIDGE	STRUCTURAL FILE NUMBER	NUMBER OF PROBABLE CRACK REPAIR LOCATIONS
MOT-75-0666R	5706750	2
MOT-75-1208	5707684	52
MOT-75-1226L	5707749	16
MOT-75-1226R	5707773	3
MOT-75-1261L	5701862	2
MOT-75-1261R	5707897	2
MOT-75-1271L	5707927	1
MOT-75-1271R	5707897	2
MOT-75-1271D	5707943	1
MOT-75-1281L	5708133	6
MOT-75-1281R	5708168	5

REFER TO SHEET 7 OF 45 FOR ADDITIONAL FATIGUE CRACK REPAIR NOTES AND TO SHEET 45 OF 45 FOR CRACK REPAIR PROCEDURES.

CONTRACTOR COORDINATION WITH UTILITIES AND OTHER GOVERMENT ENTITIES

CONTRACTOR SHALL COORDINATE WITH OTHER CONTRACTORS PERFORMING WORK IN THE AREA, ODOT, THE CITY OF DAYTON AND ALL AFFECTED UTILITIES A MINIMUM OF SIXTY DAYS PRIOR TO THE START OF CONSTRUCTION.

REFER TO UTILITIES NOTE ON SHEET 7 OF 45 FOR UTILITY COMPANY CONTACT INFORMATION. THIS COORDINATION PROCESS SHALL REQUIRE THE CRACK REPAIR CONTRACTOR TO SUBMIT A DETAILED WORK SCHEDULE AND AN ESITMATE OF THE TIME REQUIRED TO COMPLETE THE FATIGUE CRACK REPAIRS ESPECIALLY THOSE REPAIRS WHICH WILL IMPACT THE TROLLEY SERVICES PROVIDED BY THE GREATER DAYTON REGIONAL TRANSIT AUTHORITY (RTA). THE CONTRACTOR SHALL ALSO COORDINATE MAINTENANCE OF TRAFFIC (M.O.T.) AS WELL AS ANY ALTERNATIVE M.O.T. SCHEMES WITH THE RTA, ODOT AND THE CITY OF DAYTON AT LEAST THIRTY DAYS PRIOR TO THE START OF CONSTRUCTION.

ALL FATIGUE CRACK REPAIR WORK SHALL BE COMPLETED AT NIGHT DURING THE NON-PEAK TRAFFIC HOURS OF 7:00 PM TO 6:00 AM.

THE TEMPORARY RELOCATION OF THE RTA UTILITY LINES TO MEET REPAIR AND M.O.T. REQUIREMENTS AND ANY DE-ENERGIZING/RE-ENERGIZING OF THE RTA ELECTRIC SERVICE SHALL BE CARRIED OUT AND SUPERVISED BY RTA WORK FORCES ONLY. THE RTA SHALL BE PREPARED TO ACCOMMODATE OCCASIONAL NON-ENERGIZED TROLLEY MOVEMENTS THROUGH THE BRIDGE REPAIR AREA(S) AS REQUIRED TO COMPLETE THE PROPOSED BRIDGE REHABILITATION WORK. THE RTA SHALL BE RESPONSIBLE FOR ALL COSTS ASSOCIATED WITH THE RELOCATION(S) TO THEIR UTILITY LINES AND ANY OTHER MISCELLANEOUS ITEMS NOT LISTED HERE.

NO DETOURS IN THE RTA TROLLEY SERVICE WILL BE ALLOWED. THE CONTRACTOR WILL BE HELD TO A MAXIMUM OF ONE LANE CLOSURE AT A TIME PER STRUCTURE EACH NIGHT TO ENSURE THAT RTA SERVICE IS MAINTAINED AT ALL TIMES. SUCH LANE CLOSURES SHALL BE COORDINATED WITH MAINTENANCE OF TRAFFIC SCHEMES ASSOCIATED WITH OTHER CONSTRUCTION PROJECT(S) ALSO UNDERWAY IN THE SAME AREA. EXCEPT AS NOTED IN THE PLANS, THE CONTRACTOR SHALL ADHERE TO THE MINIMUM MAINTENANCE OF TRAFFIC REQUIREMENTS AS LISTED ON SHEET 11 OF 45. CONTRACTOR COORDINATION EFFORTS SHALL BE CONSIDERED INCIDENTAL TO BRIDGE REHABILITATION EFFORTS.

DESIGN AGENCY
M-E COMPANIES
638 Broadmoor Boulevard
Cincinnati, Ohio 45240
Contact: L. Clifford
513-851-6900 Fax 851-6901

DESIGNED	DRAWN	REVIEWED	DATE
CAH	CAH	JDH	12/10/08
CHECKED	REVISED	STRUCTURE FILE NUMBER	
SRB		VARIES	

GENERAL NOTES
BRIDGE No: VARIES

D07-BH-FY2009
PID No. 83358

J:\TS\07\07-229 ODOT District 7 GES\80631\structures\7a-7e Combined\7AE_GN003.dgn 1/8/2009 8:40:47 AM arhayes ODOT_MS_PDF_FULL.plt ODOT_MS_PENTABLE.tbl M-E Companies, Inc.

SHEET NUMBER					PARTICIPARTION		ITEM	ITEM EXT.	GRAND TOTAL	UNIT	DESCRIPTION	SEE SHEET NO.
	9a		9b		IM (90/10)	BH (80/20)						
											STRUCTURES	
	LUMP				LUMP	LUMP	202	11203	LUMP		PORTIONS OF STRUCTURE REMOVED, OVER 20 FOOT SPAN, AS PER PLAN	6
	13					13	202	38200	13	FT	GUARDRAIL REMOVED FOR REUSE	
	1				1		448	90000	1	CU YD	ASPHALT CONCRETE, MISC.: REPLACEMENT OF EXISTING ASPHALT	
	100				60	40	509	20001	100	POUND	REINFORCING STEEL, REPLACEMENT OF EXISTING REINFORCING STEEL, AS PER PLAN	6
	7				4	3	511	71100	7	CU YD	CONCRETE, MISC.: CLASS FS CONCRETE	
	10				4	6	512	10100	10	SQ YD	SEALING OF CONCRETE SURFACES (EPOXY-URETHANE)	
	1,209					1,209	513	10201	1,209	POUND	STRUCTURAL STEEL MEMBERS, LEVEL UF, AS PER PLAN	25
	14		92		106		513	95030	106	EACH	STRUCTURAL STEEL, MISC.: CRACK REPAIR	7
	14		92		106		513	95030	106	EACH	STRUCTURAL STEEL, MISC.: STEEL PREPARATION, INSPECTION, AND NDT	7
	4				4		513	95030	4	EACH	STRUCTURAL STEEL, MISC.: BOTTOM FLANGE REPAIR	
	116		184		300		514	20001	300	SQ FT	FIELD PAINTING OF DAMAGED STRUCTURAL STEEL, AS PER PLAN	7
	64				24	40	516	11211	64	FT	STRUCTURAL EXPANSION JOINT INCLUDING ELASTOMERIC STRIP SEAL, AS PER PLAN	6
	18				18		516	44101	18	EACH	ELASTOMERIC BEARING WITH INTERNAL LAMINATES AND LOAD PLATE (NEOPRENE), AS PER PLAN (10" X 15½" X 2⅝")	
	8				8		516	44101	8	EACH	ELASTOMERIC BEARING WITH INTERNAL LAMINATES AND LOAD PLATE (NEOPRENE), AS PER PLAN (9" X 15½" X 2⅝")	
	24				24		516	44101	24	EACH	ELASTOMERIC BEARING WITH INTERNAL LAMINATES AND LOAD PLATE (NEOPRENE), AS PER PLAN (10½" X 14½" X 2 7/16")	
	28				28		516	44101	28	EACH	ELASTOMERIC BEARING WITH INTERNAL LAMINATES AND LOAD PLATE (NEOPRENE), AS PER PLAN (12" X 17¾" X 3 1/16")	
	26					26	516	45305	26	EACH	REFURBISH BEARING DEVICE, AS PER PLAN	6
	54				19	35	516	46701	54	EACH	RESET BEARING, AS PER PLAN	6
	LUMP				LUMP	LUMP	516	47001	LUMP		JACKING AND TEMPORARY SUPPORT OF SUPERSTRUCTURE, AS PER PLAN	6
	8					8	518	12700	8	EACH	SCUPPER, VERTICAL EXTENSION	
	54				54		519	11101	54	SQ FT	PATCHING CONCRETE STRUCTURE , AS PER PLAN	6
	316				316		843	50001	316	SQ FT	PATCHING CONCRETE STRUCTURES WITH TROWELABLE MORTAR, AS PER PLAN	6
	LUMP				LUMP		SPECIAL	530 00200	LUMP		STRUCTURE, MISC.: GRIND NICKS IN JOINT ARMOR	30
	LUMP					LUMP	SPECIAL	530 00200	LUMP		STRUCTURE, MISC.: VANDAL FENCE REPAIR, AS PER PLAN	6
	LUMP				LUMP	LUMP	SPECIAL	530 00200	LUMP		STRUCTURE, MISC.: GENERAL SUBSTRUCTURE MAINTENANCE	6
											MAINTENANCE OF TRAFFIC	
			16		16		614	11100	16	HOURS	LAW ENFORCEMENT OFFICER WITH PATROL CAR	11
			9		8	1	614	18050	9	MONTH	MAINTAINING TRAFFIC, MISC.: TRUCK MOUNTED ATTENUATOR	10
			LUMP		LUMP	LUMP	614	11000	LUMP		MAINTAINING TRAFFIC	
			LUMP		LUMP	LUMP	624	10000	LUMP		MOBILIZATION	

DESIGN AGENCY
M-E COMPANIES
135 Bonnie Blue Boulevard
Bellefontaine, Ohio 43311
Contact: Ty Cottrill
937-592-4000
Fax 592-4001

DESIGNED	DRAWN	REVIEWED	DATE
CAH	CAH	JDH	12/10/08
CHECKED	REVISED	STRUCTURE FILE NUMBER	
SRB		VARIES	

GENERAL SUMMARY
BRIDGE No: VARIES

D07-BH-FY2009
PID No. 83358

J:\TS\07\07-229 ODOT District 7 GES\80631\structures\7a-7e Combined\7A_EQ001.dgn 1/13/2009 3:04:45 PM arhayes ODOT_MS_PDF_FULL.plt ODOT_MS_PENTABLE.tbl M-E Companies, Inc.

ESTIMATED QUANTITIES SUB-SUMMARY

CALCULATED BY: SRB DATE: 1/11/08
CHECKED BY: CAH DATE: 1/15/08

ITEM	EXTENSION	SUB-TOTAL	UNIT	DESCRIPTION	MOT-40-1442 $	MOT-40-1081 $	MOT-70-1130 L	MOT-70-1130 R	MOT-75-1044 L	MOT-75-1044 R	REF. SHEET
202	11203	LUMP		PORTIONS OF STRUCTURE REMOVED, OVER 20 FOOT SPAN, AS PER PLAN	LUMP		LUMP	LUMP			6 / 45
202	38200	13	FT	GUARDRAIL REMOVED FOR REUSE	13						
448	90000	1	CU YD	ASPHALT CONCRETE, MISC.: REPLACEMENT OF EXISTING ASPHALT			1				
509	20001	100	POUND	REINFORCING STEEL, REPLACEMENT OF EXISTING REINFORCING STEEL, AS PER PLAN	40		60				6 / 45
511	71100	7	CU YD	CONCRETE, MISC.: CLASS FS CONCRETE	3		4				
512	10100	10	SQ YD	SEALING OF CONCRETE SURFACES (EPOXY-URETHANE)	6		4				
513	10201	1,209	POUND	STRUCTURAL STEEL MEMBERS, LEVEL UF, AS PER PLAN							25 / 45
513	95030	14	EACH	STRUCTURAL STEEL, MISC.: CRACK REPAIR			1	1			7 / 45
513	95030	14	EACH	STRUCTURAL STEEL, MISC.: STEEL PREPARATION, INSPECTION, AND NDT			1	1			7 / 45
513	95030	4	EACH	STRUCTURAL STEEL, MISC.: BOTTOM FLANGE REPAIR			0	4			
514	20001	116	SQ FT	FIELD PAINTING OF DAMAGED STRUCTURAL STEEL, AS PER PLAN			16	24			7 / 45
516	11211	64	FT	STRUCTURAL EXPANSION JOINT INCLUDING ELASTOMERIC STRIP SEAL, AS PER PLAN	40		24				6 / 45
516	44101	18	EACH	ELASTOMERIC BEARING WITH INTERNAL LAMINATES AND LOAD PLATE (NEOPRENE), AS PER PLAN (10" X 15½" X 2⅝")			10	8			6 / 45
516	44101	8	EACH	ELASTOMERIC BEARING WITH INTERNAL LAMINATES AND LOAD PLATE (NEOPRENE), AS PER PLAN (9" X 15½" X 2⅝")			4	4			6 / 45
516	44101	24	EACH	ELASTOMERIC BEARING WITH INTERNAL LAMINATES AND LOAD PLATE (NEOPRENE), AS PER PLAN (10½" X 14½" X 2 7/16")							6 / 45
516	44101	28	EACH	ELASTOMERIC BEARING WITH INTERNAL LAMINATES AND LOAD PLATE (NEOPRENE), AS PER PLAN (12" X 17¾" X 3 1/16")							6 / 45
516	45305	26	EACH	REFURBISH BEARING DEVICE, AS PER PLAN	16	10					6 / 45
516	46701	54	EACH	RESET BEARING, AS PER PLAN	5	10			1		6/45
516	47001	LUMP		JACKING AND TEMPORARY SUPPORT OF SUPERSTRUCTURE, AS PER PLAN	LUMP	LUMP	LUMP	LUMP	LUMP	LUMP	6 / 45
518	12700	8	EACH	SCUPPER, VERTICAL EXTENSION	8						
519	11101	54	SQ FT	PATCHING CONCRETE STRUCTURE , AS PER PLAN			54				6 / 45
843	50001	316	SQ FT	PATCHING CONCRETE STRUCTURES WITH TROWELABLE MORTAR, AS PER PLAN			56	48		4	6 / 45
SPECIAL	530 00200	LUMP		STRUCTURE, MISC.: GRIND NICKS IN JOINT ARMOR							30 / 45
SPECIAL	530 00200	LUMP		STRUCTURE, MISC.: VANDAL FENCE REPAIR, AS PER PLAN	LUMP						6 / 45
SPECIAL	530 00200	LUMP		STRUCTURE, MISC.: GENERAL SUBSTRUCTURE MAINTENANCE	LUMP	LUMP	LUMP	LUMP	LUMP	LUMP	6 / 45

ESTIMATED QUANTITIES SUB-SUMMARY

CALCULATED BY: SRB DATE: 1/11/08
CHECKED BY: CAH DATE: 1/15/08

ITEM	EXTENSION	SUB-TOTAL	UNIT	DESCRIPTION	MOT-675-0055 L	SHE-29-1744 $	SHE-75-0614 L	SHE-75-0614 R	SHE-75-0888 L	SHE-75-0888 R	REF. SHEET
202	11203	*		PORTIONS OF STRUCTURE REMOVED, OVER 20 FOOT SPAN, AS PER PLAN			LUMP	LUMP	LUMP	LUMP	6 / 45
202	38200	*	FT	GUARDRAIL REMOVED FOR REUSE							
448	90000	*	CU YD	ASPHALT CONCRETE, MISC.: REPLACEMENT OF EXISTING ASPHALT							
509	20001	*	POUND	REINFORCING STEEL, REPLACEMENT OF EXISTING REINFORCING STEEL, AS PER PLAN							6 / 45
511	71100	*	CU YD	CONCRETE, MISC.: CLASS FS CONCRETE							
512	10100	*	SQ YD	SEALING OF CONCRETE SURFACES (EPOXY-URETHANE)							
513	10201	*	POUND	STRUCTURAL STEEL MEMBERS, LEVEL UF, AS PER PLAN		1,209					25 / 45
513	95030	*	EACH	STRUCTURAL STEEL, MISC.: CRACK REPAIR					5	7	7 / 45
513	95030	*	EACH	STRUCTURAL STEEL, MISC.: STEEL PREPARATION, INSPECTION, AND NDT					5	7	7 / 45
513	95030	*	EACH	STRUCTURAL STEEL, MISC.: BOTTOM FLANGE REPAIR							
514	20001	*	SQ FT	FIELD PAINTING OF DAMAGED STRUCTURAL STEEL, AS PER PLAN			12	12	22	30	7 / 45
516	11211	*	FT	STRUCTURAL EXPANSION JOINT INCLUDING ELASTOMERIC STRIP SEAL, AS PER PLAN							6 / 45
516	44101	*	EACH	ELASTOMERIC BEARING WITH INTERNAL LAMINATES AND LOAD PLATE (NEOPRENE), AS PER PLAN (10" X 15½" X 2⅝")							
516	44101	*	EACH	ELASTOMERIC BEARING WITH INTERNAL LAMINATES AND LOAD PLATE (NEOPRENE), AS PER PLAN (9" X 15½" X 2⅝")							
516	44101	*	EACH	ELASTOMERIC BEARING WITH INTERNAL LAMINATES AND LOAD PLATE (NEOPRENE), AS PER PLAN (10½" X 14½" X 2 7/16")			12	12			
516	44101	*	EACH	ELASTOMERIC BEARING WITH INTERNAL LAMINATES AND LOAD PLATE (NEOPRENE), AS PER PLAN (12" X 17¾" X 3 1/16")					12	16	
516	45305	*	EACH	REFURBISH BEARING DEVICE, AS PER PLAN							6 / 45
516	46701	*	EACH	RESET BEARING, AS PER PLAN	18	20					6/45
516	47001	*		JACKING AND TEMPORARY SUPPORT OF SUPERSTRUCTURE, AS PER PLAN	LUMP	LUMP	LUMP	LUMP	LUMP	LUMP	6 / 45
518	12700	*	EACH	SCUPPER, VERTICAL EXTENSION							
519	11101	*	SQ FT	PATCHING CONCRETE STRUCTURE , AS PER PLAN							6 / 45
843	50001	*	SQ FT	PATCHING CONCRETE STRUCTURES WITH TROWELABLE MORTAR, AS PER PLAN			48	48	48	64	6 / 45
SPECIAL	530 00200	*		STRUCTURE, MISC.: GRIND NICKS IN JOINT ARMOR					LUMP	LUMP	30 / 45
SPECIAL	530 00200	*		STRUCTURE, MISC.: VANDAL FENCE REPAIR, AS PER PLAN							6 / 45
SPECIAL	530 00200	*		STRUCTURE, MISC.: GENERAL SUBSTRUCTURE MAINTENANCE	LUMP	LUMP	LUMP	LUMP	LUMP	LUMP	6 / 45

$ STRUCTURES ARE BH FUNDED. ALL OTHER STRUCTURES ARE IM FUNDED.
* CARRIED TO SUB-TOTAL IN TABLE ABOVE

NOTE:
QUANTITIES CARRIED TO GENERAL SUMMARY ON SHEET 9 OF 45.

DESIGN AGENCY
MS COMPANIES
135 Bonnington Boulevard
Newark, Ohio 43055
Contact: Ty Cottrill
(740) 522-0330
Fax 522-0331

DESIGNED	DRAWN	REVIEWED	DATE
CAH	CAH	JDH	12/10/08
CHECKED	REVISED	STRUCTURE FILE NUMBER	
SRB		VARIES	

ESTIMATED QUANTITIES SUB-SUMMARY
BRIDGE No: VARIES

D07-BH-FY2009
PID No. 83358

J:\TS\07\07-229 ODOT District 7 GES\80631\structures\7a-7e Combined\7A_EQ001.dgn 1/13/2009 3:05:05 PM arhayes ODOT_MS_PDF_FULL.plt ODOT_MS_PENTABLE.tbl M-E Companies, Inc.

ESTIMATED QUANTITIES SUB-SUMMARY

CALCULATED BY: SRB DATE: 1/11/08
CHECKED BY: CAH DATE: 1/15/08

ITEM	EXTENSION	SUB-TOTAL	UNIT	DESCRIPTION	MOT-75-0666R	MOT-75-1208	MOT-75-1226L	MOT-75-1226R	MOT-75-1261L	MOT-75-1261R	MOT-75-1271L	MOT-75-1271R	MOT-75-1271D	MOT-75-1281L	MOT-75-1281R
513	95030	92	EACH	STRUCTURAL STEEL, MISC.: STEEL PREPARATION, INSPECTION, AND NDT	2	52	16	3	2	2	1	2	1	6	5
513	95030	92	EACH	STRUCTURAL STEEL, MISC.: CRACK REPAIR	2	52	16	3	2	2	1	2	1	6	5
514	20001	184	SQ FT	FIELD PAINTING OF DAMAGED STRUCTURAL STEEL, AS PER PLAN	4	104	32	6	4	4	2	4	2	12	10

* FOR THE PURPOSE OF ESTIMATING QUANTITIES, IT IS EXPECTED THAT ALL OF THE INSPECTED LOCATIONS WILL NEED TO BE REPAIRED.

** FOR THE PURPOSE OF ESTIMATING QUANTITIES, IT IS EXPECTED THAT ALL INSPECTION LOCATIONS WILL NEED TO BE PAINTED AND THAT EACH LOCATION WHERE PAINTING IS REQUIRED WILL HAVE AN ESTIMATED AREA OF TWO SQUARE FEET.

MAINTENANCE OF TRAFFIC GENERAL SUMMARY

ITEM	ITEM EXT.	GRAND TOTAL	IM	BH	UNIT	ITEM DESCRIPTION	REFERENCE
614	11100	16	16		HOURS	LAW ENFORCEMENT OFFICER WITH PATROL CAR	11 / 45
614	18050	9	8	1	MONTH	MAINTAINING TRAFFIC, MISC.: TRUCK MOUNTED ATTENUATOR	10 / 45
614	11000	LUMP	LUMP	LUMP		MAINTAINING TRAFFIC	
624	10000	LUMP	LUMP	LUMP		MOBILIZATION	

NOTE:
QUANTITIES CARRIED TO GENERAL SUMMARY ON SHEET 9 OF 45.

DESIGN AGENCY
M-E COMPANIES
135 Bonnington Boulevard
Newark, Ohio 43055
Contact: Ken Corbett
(740) 522-3000
Fax 522-3001

DESIGNED	DRAWN	REVIEWED	DATE
CAH	CAH	JDH	12/10/08
CHECKED	REVISED	STRUCTURE FILE NUMBER	
SRB		VARIES	

ESTIMATED QUANTITIES SUB-SUMMARY
BRIDGE No: VARIES

D07-BH-FY2009
PID No. 83358

J:\TS\07\07-229 ODOT District 7 GES\80631\structures\7a-7e Combined\7A_EQ001.dgn 1/8/2009 3:11:54 PM arhayes ODOT_MS_PDF_FULL.plt ODOT_MS_PENTABLE.tbl M-E Companies, Inc.

ITEM 614 - MAINTAINING TRAFFIC

GENERAL

BEFORE BEGINNING WORK, ALL SIGNS, DRUMS CONES SHALL BE INSTALLED AS SHOWN ON STANDARD CONSTRUCTION DRAWING MT-95.31 AND MT-95.32.

THE MAINTENANCE OF TRAFFIC FOR EACH BRIDGE SHALL CORRESPOND TO THE M.O.T. SEQUENCE AND PLAN PROVIDED IN THE TABLE AT RIGHT.

LENGTH AND DURATION OF LANE CLOSURES AND RESTRICTIONS SHALL BE AT THE APPROVAL OF THE ENGINEER. IT IS THE INTENT TO MINIMIZE THE IMPACT TO THE TRAVELING PUBLIC. LANE CLOSURES OR RESTRICTIONS OVER SEGMENTS OF THE PROJECT IN WHICH NO WORK IS ANTICIPATED WITHIN A REASONABLE TIME FRAME, AS DETERMINED BY THE ENGINEER, SHALL NOT BE PERMITTED. THE LEVEL OF UTILIZATION OF MAINTENANCE OF TRAFFIC DEVICES SHALL BE COMMENSURATE WITH WORK IN PROGRESS.

THE CONTRACTOR SHALL NOTIFY ODOT DISTRICT 7 (937-492-1141) PRIOR TO BEGINNING CONSTRUCTION ON MOT-75-1281. THE CITY WILL BE RESPONSIBLE TO INFORM THE CONTRACTOR OF OTHER SCHEDULED WORK FOR THE REPLACEMNENT OF THE MONUMENT AVENUE BRIDGE OVER THE GREAT MIAMI RIVER. IF WORK IS BEING PERFORMED BY OTHERS ON THE MONUMENT AVENUE BRIDGE THEN THE CONTRACTOR SHALL MAINTAIN ONE LANE OF TRAFFIC ON THE INSIDE LANES WHILE SPOT REPAIR PROCEDURES ARE COMPLETED. THIS WORK SHALL BE LIMITED TO 6:00 PM UNTIL 7:00 AM. IF THE MONUMENT AVENUE BRIDGE WORK WILL NOT COINCIDE WITH THE MOT-75-1281 REPAIRS THEN THE CONTRACTOR SHALL MAINTAIN TRAFFIC AS LISTED IN THE TABLE SHOWN ON SHEET 11 OF 45.

ALL WORK AND TRAFFIC CONTROL DEVICES SHALL BE IN ACCORDANCE WITH CMS 614 AND OTHER APPLICABLE PORTIONS OF THE SPECIFICATIONS, AS WELL AS THE OHIO MANUAL OF UNIFORM TRAFFIC CONTROL DEVICES. PAYMENT FOR ALL LABOR, EQUIPMENT AND MATERIALS SHALL BE INCLUDED IN THE LUMP SUM CONTRACT PRICE FOR ITEM 614, MAINTAINING TRAFFIC, UNLESS SEPARATELY ITEMIZED IN THE PLAN.

ITEM 614 - MAINTAINING TRAFFIC (FLOODLIGHTING)

FLOODLIGHTING OF THE WORK SITE FOR OPERATIONS CONDUCTED DURING NIGHTTIME PERIODS SHALL BE ACCOMPLISHED SO THAT THE LIGHTS DO NOT CAUSE GLARE TO THE DRIVERS ON THE ROADWAY. TO ENSURE THE ADEQUACY OF THE FLOODLIGHT PLACEMENT, THE CONTRACTOR AND THE ENGINEER SHALL DRIVE THROUGH THE WORK SITE EACH NIGHT WHEN THE LIGHTING IS IN PLACE AND OPERATIVE PRIOR TO COMMENCING ANY WORK. IF GLARE IS DETECTED, THE LIGHT PLACEMENT AND SHIELDING SHALL BE ADJUSTED TO THE SATISFACTION OF THE ENGINEER BEFORE WORK PROCEEDS.

PAYMENT FOR ALL LABOR, EQUIPMENT AND MATERIALS SHALL BE INCLUDED IN THE LUMP SUM CONTRACT PRICE FOR ITEM 614, MAINTAINING TRAFFIC (SECTION 642-2).

ITEM 614 - MAINTAINING TRAFFIC, MISC.: TRUCK MOUNTED ATTENUATOR

THE CONTRACTOR SHALL SUPPLY A TRUCK-MOUNTED ATTENUATOR FOR EACH WORK ZONE WHEN TRAFFIC IS BEING DIVERTED AND WORK IS IN PROGRESS. THE TRUCK-MOUNTED ATTENUATOR SHALL BE AN ENERGY-ABSORBING DEVICE ATTACHED TO THE REAR OF A SHADOW TRAILER OR TRUCK AND SHALL BE APPROVED BY ODOT PRIOR TO USE. THEY SHALL BE USED IN ACCORDANCE WITH THE MANUFACTURER'S SPECIFICATIONS. THEY SHALL ALSO BE LOCATED IN ADVANCE OF THE WORK AREA, WORKERS AND/OR EQUIPMENT TO REDUCE THE SEVERITY OF REAR-END CRASHES FROM ERRANT VEHICLES. THE FOLLOWING ESTIMATED QUANTITY TO BE USED AS DIRECTED BY THE ENGINEER HAS BEEN PROVIDED FOR THIS PURPOSE:

ITEM 614 - MAINTAINING TRAFFIC, MISC.:
TRUCK MOUNTED ATTENUATOR 9 MONTHS

BRIDGE NO.	MAINTENANCE OF TRAFFIC PHASE SEQUENCE AND PLAN	STRUCTURE REHABILITATION PLAN PAGE	TIME OF WORK RESTRICTED TO	STANDARD CONSTRUCTION DRAWING
MOT-40-1442	PHASE 1: -CLOSE OUTSIDE SB LANE AND SHOULDER ON AIRPORT ACCESS RD FOR BRIDGE REHABILITATION	PAGES 15 - 17	-	MT-95.30
	PHASE 2: -CLOSE US-40 (2) WB LANES AND TWO WAY LEFT TURN TO HAVE ONE EB LANE AND ONE WB LANE FOR EXPANSION JOINT REHABILITATION.REFER TO PAGE 12-14 -CLOSE NB OUTSIDE LANE ON AIRPORT ACCESS ROAD FOR BRIDGE REHABILITATION	PAGES 15 - 17	8 PM SATURDAY TO 6 AM FOLLOWING SUNDAY	MT-95.31 MT-95.61
	PHASE 3: -CLOSE US-40 EB OUTSIDE LANE FOR CONSTRUCTION OF VANDAL FENCE	PAGE 15	8 PM TO 6 AM MONDAY - FRIDAY	MT-95.31
MOT-70-1130 L/R	PHASE 1: -CLOSE NB TWO LANES (OUTSIDE) ON SR-48 FOR WELDING EB BRIDGE	PAGE 18	8 PM TO 6 AM MONDAY - FRIDAY 7 PM TO 7 AM & 9 AM TO 2 PM ON WEEKENDS	MT-95.30
	PHASE 2: -CLOSE (2) I-70 WB LANES AND USE ACCELERATION LANE AND EXISTING SHOULDER DURING ABUTMENT REPAIR.	PAGE 19		MT-95.30 MT-95.50 MT-98.16 MT-102.20
SHE-29-1744	-SIDEWALK CLOSED FOR BRIDGE REHABILITATION	PAGE 24	NO RESTRICTIONS	-
SHE-75-0614 L/R	PHASE 1: -CLOSE I-75 RIGHT LANE FOR BRIDGE REHABILITATION	PAGE 26-27	7 PM TO 6 AM MONDAY - FRIDAY 9 PM TO 6 AM ON WEEKENDS	MT-95.30
	PHASE 2: -CLOSE I-75 LEFT LANE FOR BRIDGE REHABILITATION	PAGE 26-27		MT-95.30
SHE-75-0888 L/R	PHASE 1: -CLOSE I-75 RIGHT LANE FOR BRIDGE REHABILITATION	PAGE 28-30		MT-95.30
	PHASE 2: -CLOSE I-75 LEFT LANE FOR BRIDGE REHABILITATION	PAGE 28-30		MT-95.30
MOT-40-1081	-NO ROADWAY CLOSURE NEEDED	PAGE 8	-	-
MOT-75-1044	-NO ROADWAY CLOSURE NEEDED	PAGE 8	-	-
MOT-675-0055L	-CLOSE I-75 NB LEFT LANE FOR BEARING REHABILITATION	PAGE 8	8 PM TO 6 AM MONDAY - FRIDAY 6 PM TO 7 AM 9 AM TO 3 PM WEEKEND	MT-95.30
	-CLOSE I-75 NB RIGHT LANE FOR BEARING REHABILITATION	PAGE 8		MT-95.30
	-CLOSE I-75 SB LEFT LANE FOR BEARING REHABILITATION	PAGE 8		MT-95.30

QUANTITIES CARRIED TO SHEET 9 OF 45.

DESIGN AGENCY
638 Broadwayville Boulevard
Springfield, Ohio 45503
Contact: L. Clifford
614-787-0000 Fax 614-801
M-E COMPANIES

DESIGNED	DRAWN	REVIEWED	DATE
CAH	CAH	JDH	12/10/08
CHECKED	REVISED	STRUCTURE FILE NUMBER	
SRB		VARIES	

MAINTENANCE OF TRAFFIC
BRIDGE No: VARIES

D07-BH-FY2009
PID No. 83358

J:\TS\07\07-229 ODOT District 7 GES\80631\structures\7a-7e Combined\7AE_MN001.dgn 1/8/2009 8:40:53 AM arhayes ODOT_MS_PDF_FULL.plt ODOT_MS_PENTABLE.tbl M-E Companies, Inc.

ITEM 614 - LAW ENFORCEMENT OFFICER (WITH PATROL CAR) FOR ASSISTANCE DURING CONSTRUCTION OPERATIONS

USE OF LAW ENFORCEMENT OFFICERS (LEOS) BY CONTRACTORS OTHER THAN THE USES SPECIFIED IN THIS NOTE WILL NOT GENERALLY BE PERMITTED AT PROJECT COST UNLESS PRIOR APPROVAL HAS BEEN OBTAINED FROM THE ENGINEER. LEOS SHOULD NOT BE USED WHERE THE OHIO MANUAL OF UNIFORM TRAFFIC CONTROL DEVICES (OMUTCD) INTENDS THAT FLAGGERS BE USED.

IN ADDITION TO THE REQUIREMENTS OF CMS 614 AND THE OMUTCD, A UNIFORMED LEO WITH AN OFFICIAL PATROL CAR (CAR WITH TOP-MOUNTED EMERGENCY FLASHING LIGHTS AND COMPLETE MARKINGS OF THE APPROPRIATE LAW ENFORCEMENT AGENCY) SHOULD BE PROVIDED FOR CONTROLLING TRAFFIC FOR THE FOLLOWING TASKS:

- DURING PHASE 2 CONSTUCTION SEQUENCE FOR THE MOT-40-1442 BRIDGE EXPANSION JOINT REPAIR OPERATION

LEOS SHOULD NOT FORGO THEIR TRAFFIC CONTROL RESPONSIBILITIES TO APPREHEND MOTORISTS FOR ROUTINE TRAFFIC VIOLATIONS. HOWEVER, IF A MOTORISTS ACTIONS ARE CONSIDERED TO BE RECKLESS, THEN PURSUIT OF THE MOTORIST IS APPROPRIATE.

THE LEOS WORK AT THE DIRECTION OF THE CONTRACTOR. THE CONTRACTOR IS RESPONSIBLE FOR SECURING THE SERVICES OF THE LEOS AND COMMUNICATING THE INTENTIONS OF THE PLANS WITH RESPECT TO DUTIES OF THE LEOS. THE ENGINEER SHALL HAVE FINAL CONTROL OVER THE LEOS' DUTIES AND PLACEMENT, AND WILL RESOLVE ANY ISSUES THAT MAY ARISE BETWEEN THE TWO PARTIES. THE CONTRACTOR SHALL PROVIDE THE ENGINEER WITH A LIST OF THE APPROPRIATE LAW ENFORCEMENT AGENCY(S), INCLUDING ADDRESS AND TELEPHONE NUMBER.

THE LEO SHOULD REPORT IN TO THE CONTRACTOR PRIOR TO THE START OF THE SHIFT TO RECEIVE INSTRUCTIONS REGARDING SPECIFIC WORK ASSIGNMENTS DURING THE SHIFT. THE LEO IS EXPECTED TO STAY AT THE PROJECT SITE FOR THE ENTIRE DURATION OF THE SHIFT. SHOULD IT BE NECESSARY TO LEAVE THE PROJECT SITE, THE LEO SHOULD NOTIFY THE ENGINEER. THE CONTRACTOR SHALL PROVIDE THE LEO WITH A TWO-WAY COMMUNICATION DEVICE WHICH SHALL BE RETURNED TO THE CONTRACTOR AT THE END OF THE SHIFT.

LAW ENFORCEMENT OFFICERS (WITH PATROL CAR) REQUIRED BY THE TRAFFIC MAINTENANCE TASKS ABOVE SHALL BE PAID FOR ON A UNIT PRICE (HOURLY) BASIS UNDER ITEM 614, LAW ENFORCEMENT OFFICER (WITH PATROL CAR). THE FOLLOWING ESTIMATED QUANTITY HAS BEEN CARRIED TO THE GENERAL SUMMARY.

ITEM 614, LAW ENFORCEMENT OFFICER WITH PATROL CAR 16 HOURS

THE HOURS PAID SHALL INCLUDE MINIMUM SHOW-UP TIME REQUIRED BY THE LAW ENFORCEMENT AGENCY INVOLVED.

ANY ADDITIONAL COSTS (ADMINISTRATIVE OR OTHERWISE) INCURRED BY THE CONTRACTOR TO OBTAIN THE SERVICES OF AN LEO ARE INCLUDED WITH THE BID UNIT PRICE FOR ITEM 614, LAW ENFORCEMENT OFFICER WITH PATROL CAR.

BRIDGE NO.	MAINTENANCE OF TRAFFIC PHASE SEQUENCE AND PLAN	STRUCTURE REHABILITATION PLAN SHEET	TIME OF WORK RESTRICTED TO	STANDARD CONSTRUCTION DRAWING
MOT-75-0666R	-CLOSE LEFT SHOULDER OF RAMP B SB ONLY.	SHEET 31	NO TIME RESTRICTIONS	MT-95.32
MOT-75-1208	PHASE 1: -MAINTAIN 1 CURB LANE EB AND 1 WB ON W. 5TH ST. AND 1 CURB LANE NB AND SB ON S. EDWIN C MOSES BLVD. USING EXISTING PAVEMENT. -CLOSE 2 EB CENTER LANES ON W. 5TH ST. AND 1 NB AND 1 SB CENTER LANE ON S. EDWIN MOSES BLVD. ONLY. -CONTRACTOR SHALL OPEN EXISTING LANES AS SOON AS POSSIBLE TO MAINTAIN AT MINIMUM 50 FEET OF THE TURN LANES AT THE INTERSECTION OF W. 5TH ST. AND S. EDWIN MOSES BLVD. PHASE 2: -MAINTAIN 1 CENTER LANE WB AND 1 EB (USE 1 OF 3 WB LANES) ON W. 5TH ST. AND 1 CENTER LANE NB AND SB S. EDWIN C MOSES BLVD. USING EXISTING PAVEMENT. -CLOSE 1 EB AND 1 WB CURB LANE ON W. 5TH ST. AND 1 NB AND 1 SB CURB LANE ON S. EDWIN C MOSES BLVD. ONLY. -CONTRACTOR SHALL OPEN EXISTING LANES AS SOON AS POSSIBLE TO MAINTAIN AT MINIMUM 50 FEET OF THE TURN LANES AT THE INTERSECTION OF W. 5TH ST. AND S. EDWIN MOSES BLVD.	SHEET 32	6:00 PM TO 7:00 AM	MT-95.32 MT-95.31
MOT-75-1226L	-CLOSE BIKE PATH ONLY.	SHEET 33	NO TIME RESTRICTIONS	MT-95.32
MOT-75-1226L	PHASE 1: -CLOSE SB LEFT LANE ONLY ON S. ROBERT DR. ONLY. PHASE 2: -CLOSE SB RIGHT LANE ON S. ROBERT DR. ONLY. -CLOSE BIKE PATH.	SHEET 34	9:00 AM TO 3:00 PM	MT-95.31 MT-95.32
MOT-75-1226L	-NO ROADWAY CLOSURES.	SHEET 35		
MOT-75-1226R	-CLOSURE OF MINIMAL AMOUNT OF PARKING SPACES TO PERFORM REHAB. WORK.	SHEET 36		
MOT-75-1226R	-CLOSURE OF MINIMAL AMOUNT OF PARKING SPACES TO PERFORM REHAB. WORK.	SHEET 37		
MOT-75-1261L	-CLOSE WB MIDDLE 2 LANES ON W. 2ND ST. ONLY.	SHEET 38	9:00 AM TO 3:00 PM	MT-95.32
MOT-75-1261R	PHASE 1: -CLOSE WB LEFT 2 LANES ONLY ON W. 2ND ST. ONLY. -MAINTAIN TRAFFIC AT ALL TIMES ON VISTA VIEW DRIVE. PHASE 2: -CLOSE 2 WB RIGHT THRU LANES ONLY ON W. 2ND ST. ONLY. -MAINTAIN TRAFFIC AT ALL TIMES ON THE I-75 NB RAMP.	SHEET 39	9:00 AM TO 3:00 PM	MT-95.32 MT-95.31
MOT-75-1271L	-CLOSE 2 LANES UNDER SPOT REPAIR LOCATION ON W. 1ST ST. ONLY. -MAINTAIN AT MINIMUM 1 WB AND 1 EB LANE ON 1ST. ST AT ALL TIMES.	SHEET 40	9:00 AM TO 3:00 PM	MT-95.32
MOT-75-1271R	-CLOSE MIDDLE 2 LANES UNDER SPOT REPAIR LOCATION ON W. 1ST ST. ONLY. (CLOSE ONE LANE EB AND ONE LANE WB IN THE CENTER) -MAINTAIN AT MINIMUM OF 1 WB AND 1 EB LANE AT ALL TIMES. -MAINTAIN AT MINIMUM 1 LANE OF LEFT TURN LANES ON I-75 NB OFF RAMP ONTO W. 1ST STREET AT ALL TIMES.	SHEET 41	9:00 AM TO 3:00 PM	MT-95.32
MOT-75-1271D	-CLOSE 2 EB LANES UNDER SPOT REPAIR LOCATION ON W. 1ST ST. ONLY. -MAINTAIN AT MINIMUM 1 WB AND 1 EB LANE ON W. 1ST STREET AT ALL TIMES.	SHEET 42	9:00 AM TO 3:00 PM	MT-95.32
MOT-75-1281L	PHASE 1: -CLOSE WB MIDDLE 2 LANES ON W. MONUMENT ST. ONLY. -MAINTAIN AT MINIMUM 1 WB LANE ONTO ROBERT DRIVE FROM W. MONUMENT AVENUE AT ALL TIMES. PHASE 2: -CLOSE 2 WB RIGHT LANES ON W. MONUMENT ST. ONLY. -MAINTAIN AT MINIMUM 1 WB LANE ON W. MONUMENT ST. AT ALL TIMES.	SHEET 43	9:00 AM TO 3:00 PM	MT-95.32 MT-95.31
MOT-75-1281R	-CLOSE WB MIDDLE 2 LANES ON W. MONUMENT ST. ONLY. -MAINTAIN AT MINIMUM 1 LANE ON MAXWELL DRIVE ONTO W. MONUMENT STREET AT ALL TIMES.	SHEET 44	9:00 AM TO 3:00 PM	MT-95.32

QUANTITIES CARRIED TO SHEET 9 OF 45.

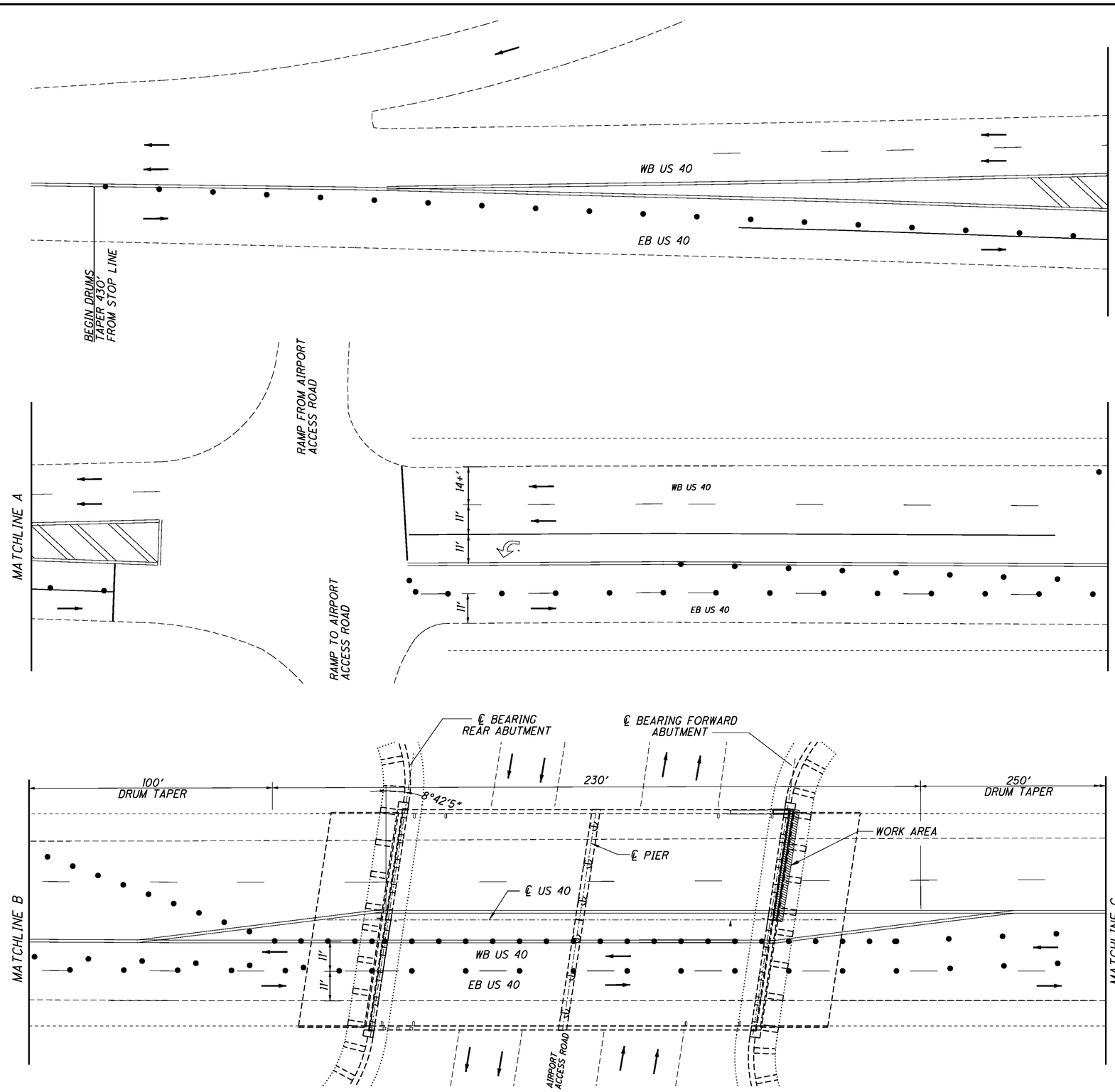

STRIP SEAL REPLACEMENT M.O.T. PLAN - PHASE 2

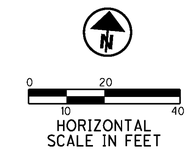

LEGEND

DRUMS 20' ON CENTER

DRUMS 10' ON CENTER

NOTE:

REDUCE FIVE LANE TRAFFIC PATTERN DOWN TO ONE LANE EASTBOUND AND ONE LANE WESTBOUND ACROSS THE BRIDGE. BOTH LANES OF TRAFFIC WILL BE MAINTAINED ON THE SOUTH SIDE OF THE BRIDGE FOR EXPANSION JOINT REPAIR. RE-ESTABLISH NORMAL TRAFFIC PATTERNS ONCE OFF OF THE BRIDGE.

SEE SCD MT-95.31 & MT-95.61
FOR LEAD-IN SIGNS

DESIGN AGENCY
MS COMPANIES
655 Brookside Boulevard
Beaver Creek, OH 45430
Contact: A. Cox
937-427-8831
Fax 88-401

DESIGNED	DRAWN	REVIEWED	DATE
BTR	BTR	DLW	12/10/08
CHECKED	REVISED	STRUCTURE FILE NUMBER	
DLW		5703409	

MAINTENANCE OF TRAFFIC PLAN
BRIDGE No.: MOT-40-1442
U.S. 40 OVER AIRPORT ACCESS ROAD

D07-BH-FY2009
PID No. 83358

J:\TS\07\07-229 ODOT District 7 GES\80631\structures\7a-7e Combined\MOT-40-1442\80631MP001_PH02.dgn 12/15/2008 9:26:28 AM arhayes ODOT_MS_PDF_FULL.plt ODOT_MS_PENTABLE.tbl M-E Comp

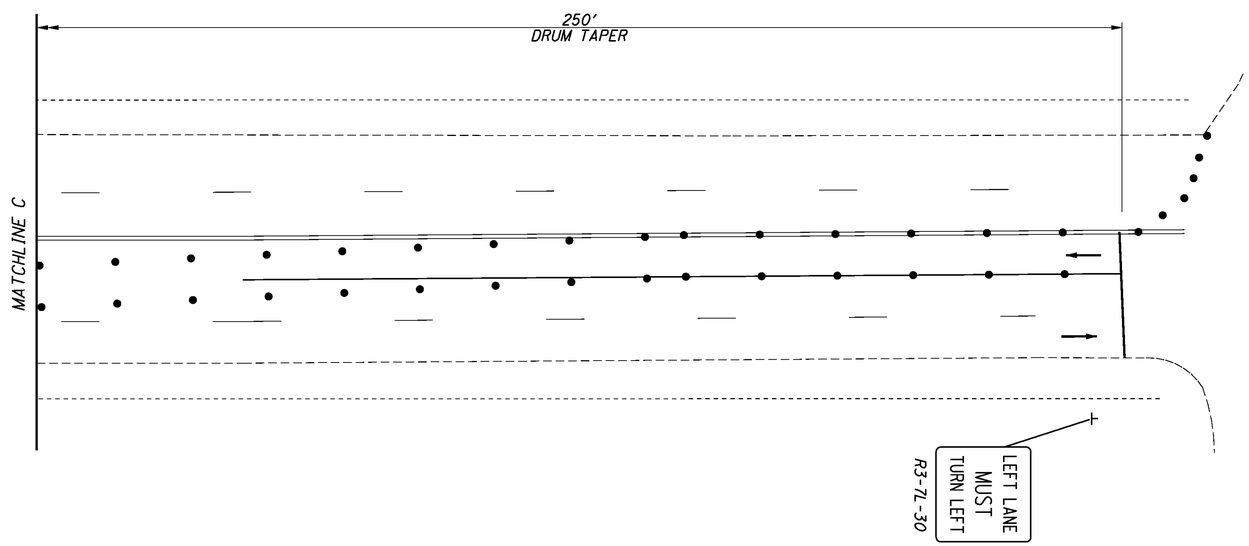

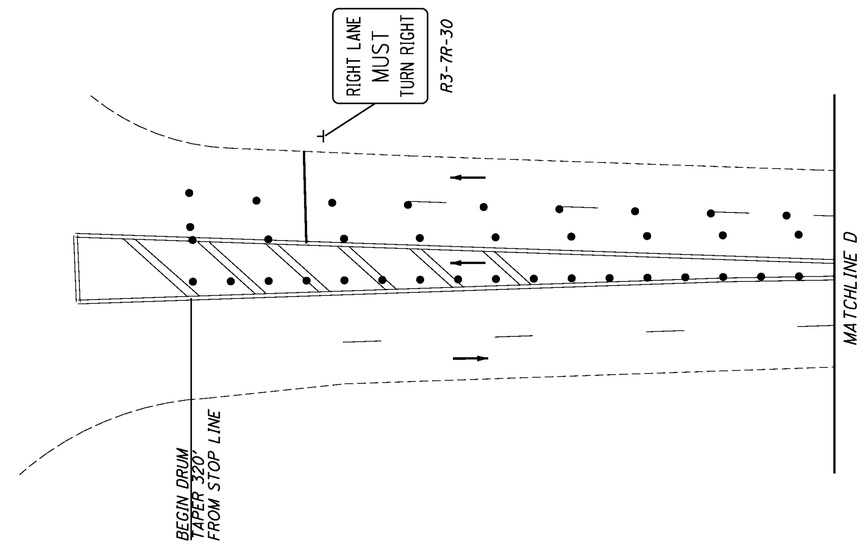

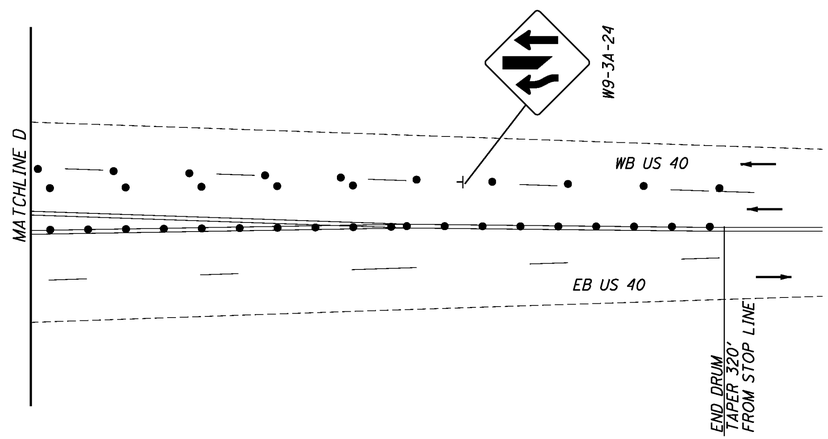

STRIP SEAL REPLACEMENT M.O.T. PLAN - PHASE 2

LEGEND

DRUMS 20' ON CENTER

DRUMS 10' ON CENTER

N

0 10 20 40

HORIZONTAL
SCALE IN FEET

NOTE:

THE CONTRACTOR SHALL INSTALL YELLOW FLASHING BEACON LIGHTS ON THE DRUMS WITHIN THE INTERSECTION AND SPACE EVERY 50' ON CENTER. THE COST TO INSTALL THE BEACONS SHALL BE INCLUDED IN ITEM 614 MAINTAINING TRAFFIC, LUMP SUM BID. IN ADDITION THE CONTRACTOR SHALL EMPLOY A LEO TO ASSIST THE TRAFFIC AT BOTH INTERSECTIONS UNTIL THE WORK IS COMPLETED.

DESIGN AGENCY
M-E COMPANIES
ESS Brookside Boulevard
Westerville, OH 43081
Contact: A. Cox
614-895-7900 Ext. 1
614-895-7901 Fax 614-901

DESIGNED	DRAWN	REVIEWED	DATE
BTR	BTR	DLW	12/10/08
CHECKED	REVISED	STRUCTURE FILE NUMBER	
DLW		5703409	

MAINTENANCE OF TRAFFIC PLAN
BRIDGE No.: MOT-40-1442
U.S. 40 OVER AIRPORT ACCESS ROAD

MOT-D07-BH-FY2009
PID No. 83358

J:\TS\07\07-229 ODOT District 7 GES\80631\structures\7a-7e Combined\MOT-40-1442\80631MP002_PH02.dgn 1/8/2009 8:40:59 AM arhayes ODOT_MS_PDF_FULL.plt ODOT_MS_PENTABLE.tbl M-E Compa

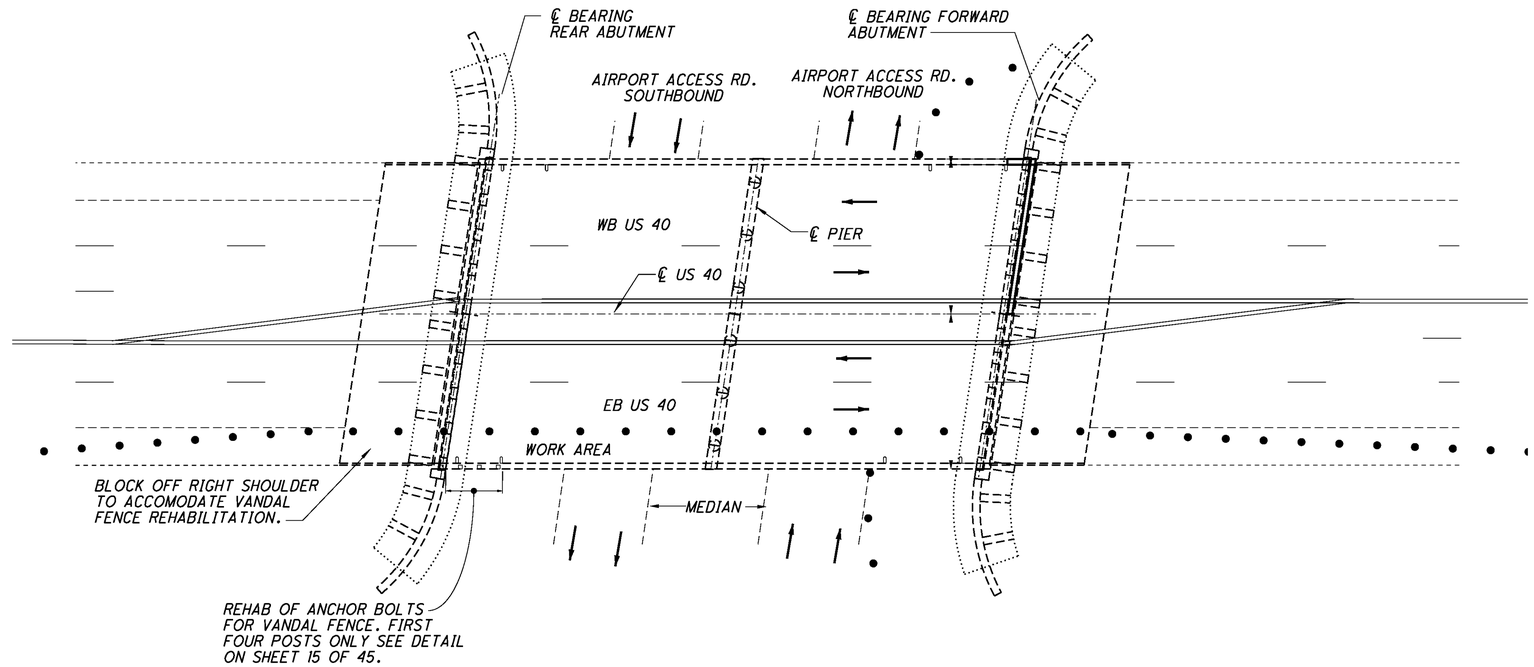

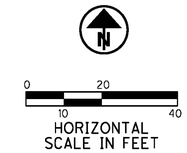

NOTES:

1. BLOCK OFF NORTHBOUND AND/OR SOUTHBOUND AIRPORT ACCESS ROAD SHOULDERS AS REQUIRED FOR BEARING AND SCUPPER REHABILITATION. PROVIDE A TRUCK MOUNTED ATTENUATOR DURING SHOULDER CLOSURES.
2. REFER TO SHEET 10 OF 45 FOR ADDITIONAL MOT INFORMATION.

BRIDGE BEARING, SCUPPER AND VANDAL FENCE REHAB M.O.T. PLAN - PHASE 3

LEGEND

• • • • DRUMS 10' ON CENTER

DESIGN AGENCY
MS3 COMPANIES
655 Beachside Boulevard
Merritt Island, FL 32952
Contact: A. CO/DLW
Office: 321-452-1000
Fax: 86-401

DESIGNED	DRAWN	REVIEWED	DATE
BTR	BTR	DLW	12/10/08
CHECKED	REVISED	STRUCTURE FILE NUMBER	
DLW		5703409	

MAINTENANCE OF TRAFFIC PLAN
BRIDGE No.: MOT-40-1442
U.S. 40 OVER AIRPORT ACCESS ROAD

D07-BH-FY2009
PID No. 83358

5 / 5

14
45

J:\TS\07\07-229 ODOT District 7 GES\80631\structures\7a-7e Combined\MOT-40-1442\80631MP003_PH03.dgn 12/15/2008 9:26:31 AM arhayes ODOT_MS_PDF_FULL.plt ODOT_MS_PENTABLE.tbl M-E Comp

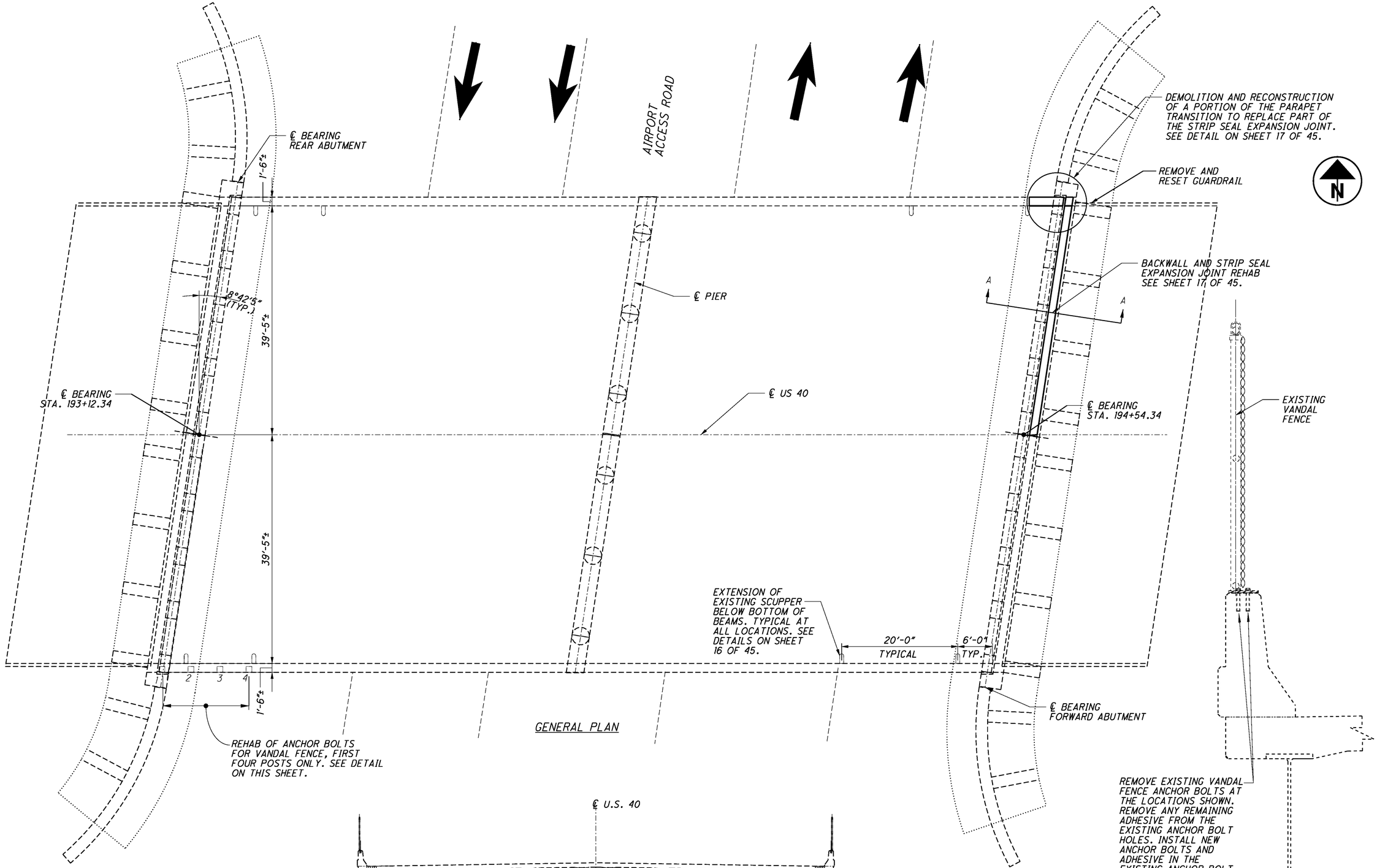

GENERAL PLAN

TYPICAL TRANSVERSE DECK SECTION

NOTE:
SEE SHEET 17 OF 45 FOR SECTION A-A DEMO/REHAB DETAILS

REMOVE EXISTING VANDAL FENCE ANCHOR BOLTS AT THE LOCATIONS SHOWN. REMOVE ANY REMAINING ADHESIVE FROM THE EXISTING ANCHOR BOLT HOLES. INSTALL NEW ANCHOR BOLTS AND ADHESIVE IN THE EXISTING ANCHOR BOLT HOLES. ALL COSTS SHALL BE PAID UNDER ITEM SPECIAL - STRUCTURE, MISC.: VANDAL FENCE REPAIR, AS PER PLAN.

VANDAL FENCE REHAB DETAIL

DESIGN AGENCY
MEE COMPANIES
635 Brookside Boulevard
Westerville, OH 43081
Contact: M. CIOTOLA
614-882-4500 ext. 357
Fax 882-4601

DESIGNED	DRAWN	REVIEWED	DATE
CAH	CAH	JDH	12/10/08
CHECKED	REVISED	STRUCTURE FILE NUMBER	
SRB		5703409	

SUPERSTRUCTURE REHABILITATION PLAN
BRIDGE No.: MOT-40-1442
U.S. 40 OVER AIRPORT ACCESS ROAD

D07-BH-FY2009
PID No.83358

1/3

15/45

J:\TS\07\07-229 ODOT District 7 GES\80631\structures\7a-7e Combined\MOT-40-1442\1442CSD001.dgn 12/15/2008 9:26:32 AM arhayes ODOT_MS_PDF_FULL.plt ODOT_MS_PENTABLE.tbl M-E Companies,

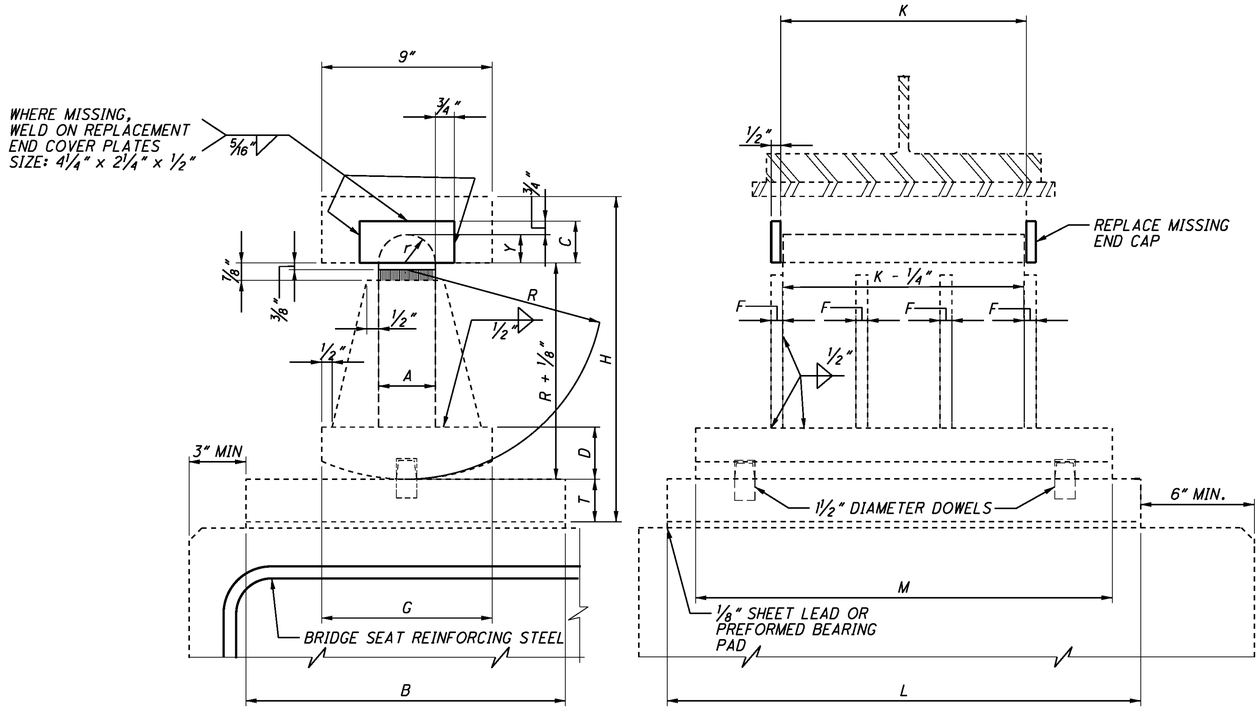

STRUCTURAL STEEL R-125 ROCKER

REFER TO STANDARD DRAWING RB-1-55 FOR ADDITIONAL INFORMATION

ROCKER No.	DIMENSIONS (INCHES)													WEIGHT EACH (LB)	MAXIMUM LOAD (POUNDS)
	A	B	C	D	F	G	H	K	L	M	R	T	Y	ROCKER	
R-125	3	11	3	2	½	8	12⅛	10½	20	18	7½	1½	1 7/16	315	125,000

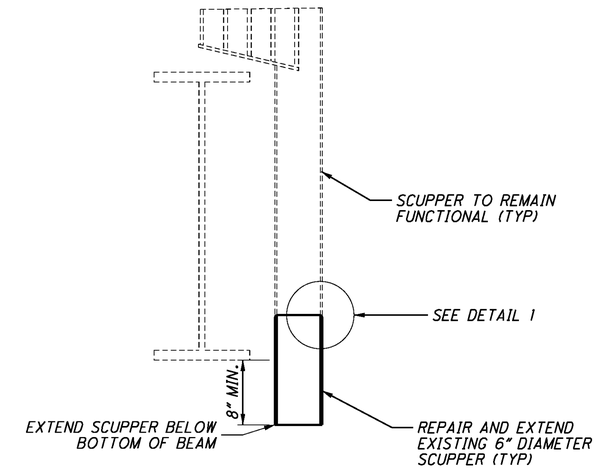

SCUPPER EXTENSION DETAIL (8 EACH)

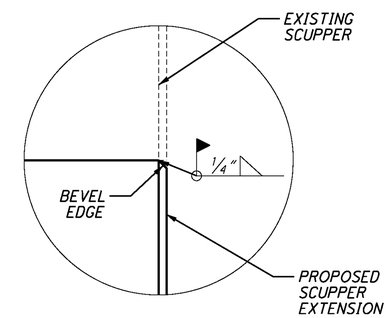

DETAIL 1

NOTES:

1. REPLACEMENT OF MISSING BEARING END COVER PLATES SHALL INCLUDE ALL MATERIALS, LABOR AND EQUIPMENT REQUIRED TO COMPLETE THE WORK TO THE SATISFACTION OF THE ENGINEER. CONTRACTOR SHALL VERIFY REPAIR LOCATIONS PRIOR TO STARTING WORK. COVER PLATE REPLACEMENT SHALL BE PAID FOR UNDER ITEM 516 - REFURBISH BEARING DEVICE, AS PER PLAN.
2. CONTRACTOR SHALL CLOSE THE AIRPORT ACCESS ROAD SHOULDER PAVEMENT TO TRAFFIC DURING SCUPPER REHABILITATION.
3. THE NORTH FIVE ROCKER BEARINGS IN THE FORWARD ABUTMENT ARE TO BE RESET. (SEE SHEET 6 OF 45 FOR JACKING NOTES.) ALL COST ASSOCIATE WITH THIS WORK SHALL BE PAID FOR UNDER ITEM 516 - RESET BEARING, AS PER PLAN.
4. ALL COST ASSOCIATED WITH SCUPPER EXTENSIONS SHALL BE PAID FOR UNDER ITEM 518 - SCUPPER VERTICAL EXTENSION.

DESIGN AGENCY
MS COMPANIES
835 Brookside Boulevard
Beavercreek, Ohio 45430
Contact: Jay Hayes, P.E.
(937) 426-8551
Fax 426-8501

DESIGNED	DRAWN	REVIEWED	DATE
CAH	CAH	JDH	12/10/08
CHECKED	REVISED	STRUCTURE FILE NUMBER	
SRB		5703409	

ABUTMENT BEARING & SCUPPER REHABILITATION
BRIDGE No.: MOT-40-1442
U.S. 40 OVER AIRPORT ACCESS ROAD

D07-BH-FY2009
PID No. 83358

J:\TS\07\07-229 ODOT District 7 GES\80631\structures\7a-7e Combined\MOT-40-1442\D-7GES005.dgn 1/8/2009 8:41:03 AM arhayes ODOT_MS_PDF_FULL.plt ODOT_MS_PENTABLE.tbl M-E Companies, Inc

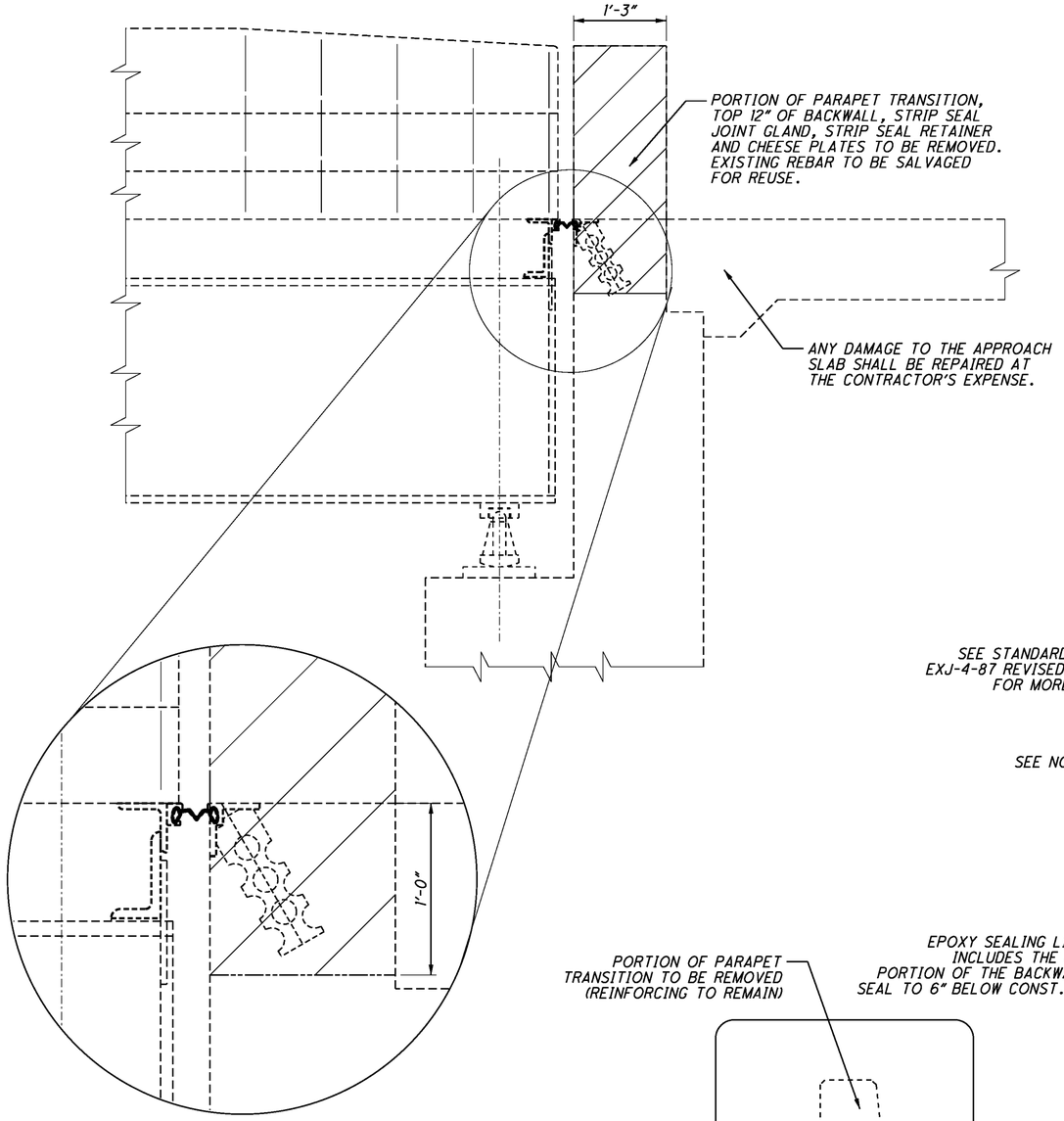

EXISTING ABUTMENT & PARAPET DEMOLITION
SECTION A-A SHEET 15 OF 45

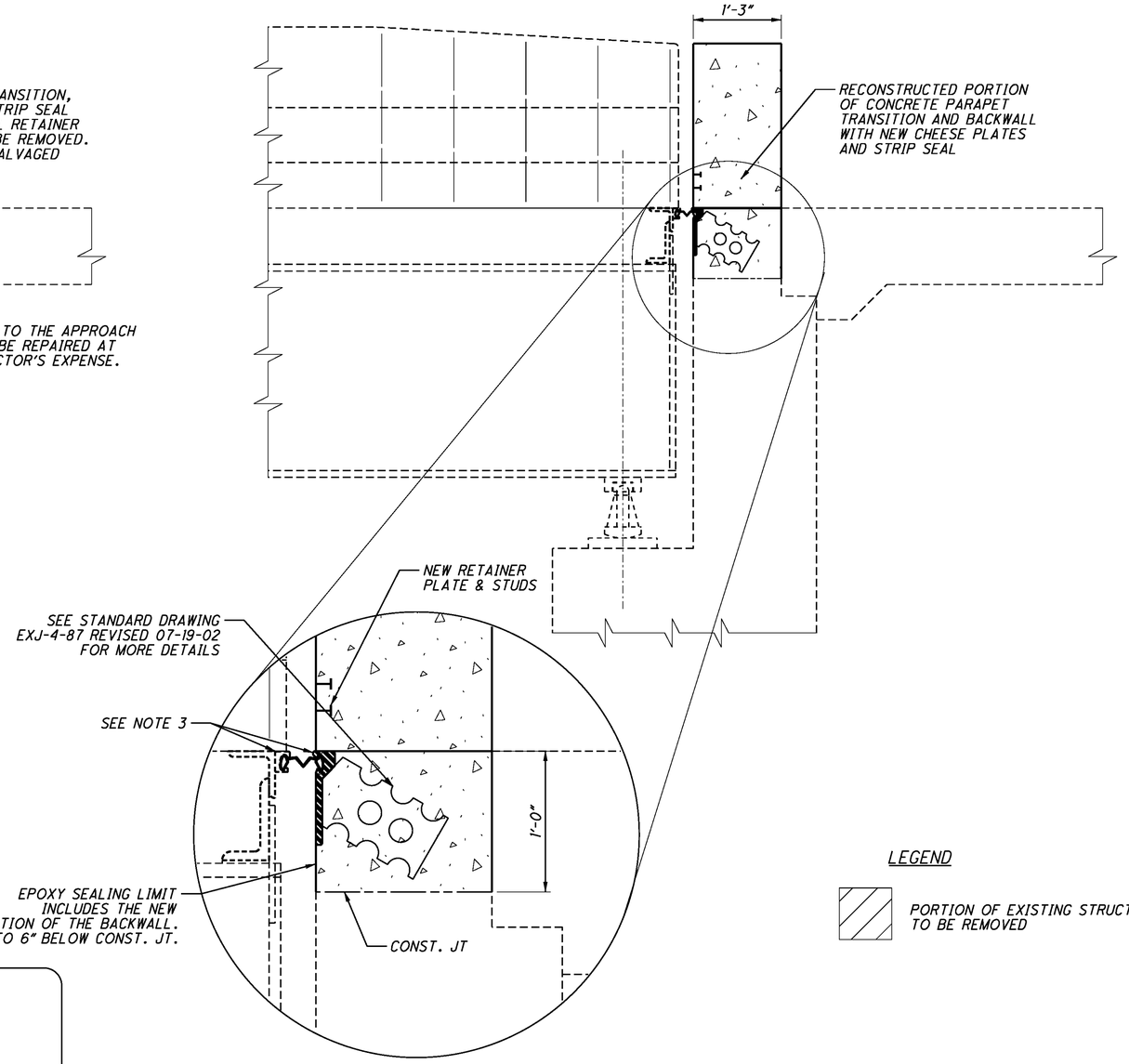

ABUTMENT & PARAPET REHABILITATION
SECTION A-A SHEET 15 OF 45

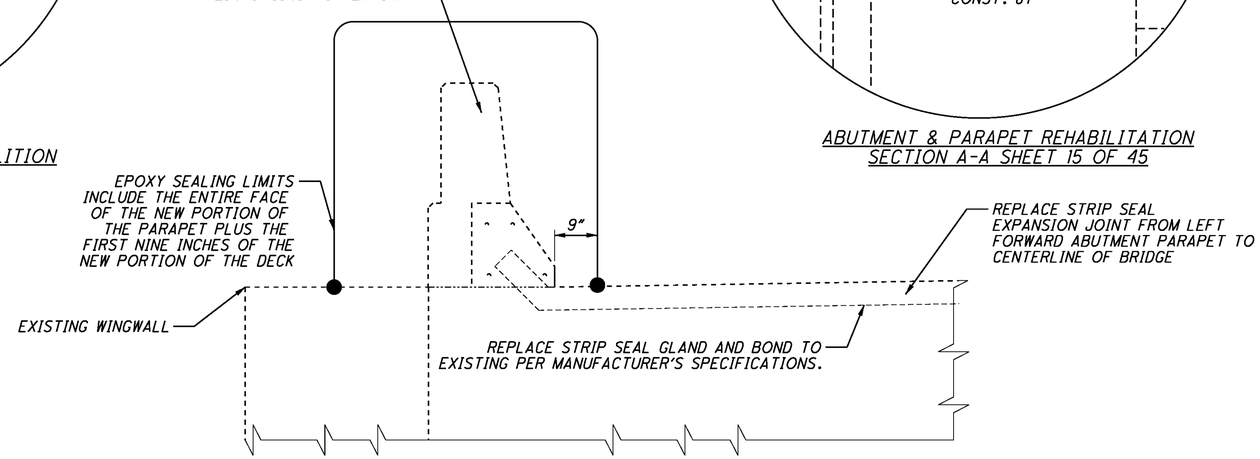

PARTIAL ELEVATION

LEGEND

PORTION OF EXISTING STRUCTURE TO BE REMOVED

NOTES:

1. ALL BACKWALL AND PARAPET WORK TO BE COMPLETED OVER THE WEEKEND USING ITEM - 511 CONCRETE MISC.: CLASS FS CONCRETE.
2. SEE SHEETS 15 THRU 17 OF 45 FOR MOT PLANS.
3. CONTRACTOR TO VERIFY THE COMPATIBILITY OF THE NEW EXPANSION JOINT TO THE REMAINS OF THE EXISTING EXPANSION JOINT.
4. SIZE AND SHAPE OF PARAPET TRANSITION SHALL MATCH EXISTING CONDITION.
5. COSTS ASSOCIATED WITH THE ELASTOMERIC STRIP SEAL SHALL BE INCLUDED WITH ITEM 516 - STRUCTURAL EXPANSION JOINT INCLUDING ELASTOMERIC STRIP SEAL, AS PER PLAN.

DESIGN AGENCY
MS COMPANIES
835 Brewerville Boulevard
Suite 100, Kettering, OH 45429
Contact: L. Carl Gill
Phone: 937-294-5900
Fax: 937-294-5901

DESIGNED	DRAWN	REVIEWED	DATE
CAH	CAH	JDH	12/10/08
CHECKED	REVISED	STRUCTURE FILE NUMBER	
SRB		5703409	

EXPANSION JOINT REHABILITATION DETAILS

BRIDGE No.: MOT-40-1442
U.S. 40 OVER AIRPORT ACCESS ROAD

D07-BH-FY2009
PID No. 83358

J:\TS\07\07-229 ODOT District 7 GES\80631\structures\7a-7e Combined\MOT-40-1442\1442CSD002.dgn 1/8/2009 8:41:05 AM arhayes ODOT_MS_PDF_FULL.plt ODOT_MS_PENTABLE.tbl M-E Companies, Inc.

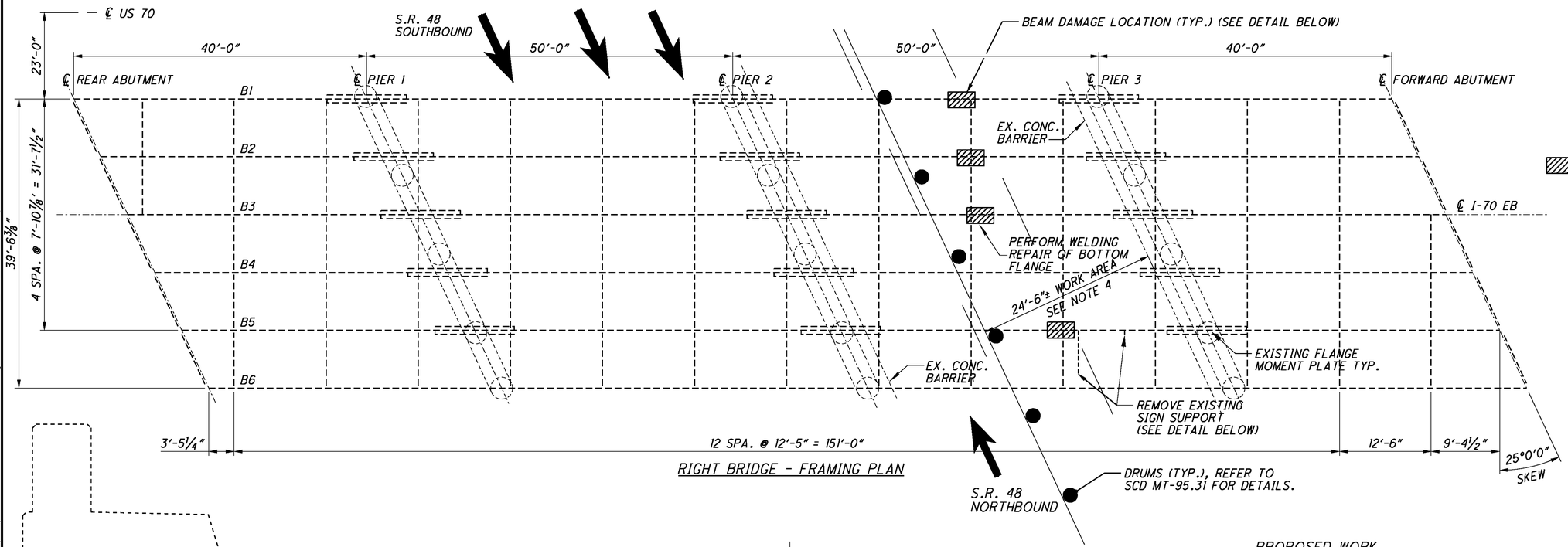

RIGHT BRIDGE - FRAMING PLAN

LEGEND

DAMAGE TO BOTTOM FLANGE IN REGION OF HIGH TENSILE STRESS

REFER TO SCD MT-95.31
OMUTCD FIGURE 6H-37
TEM 602-5.8

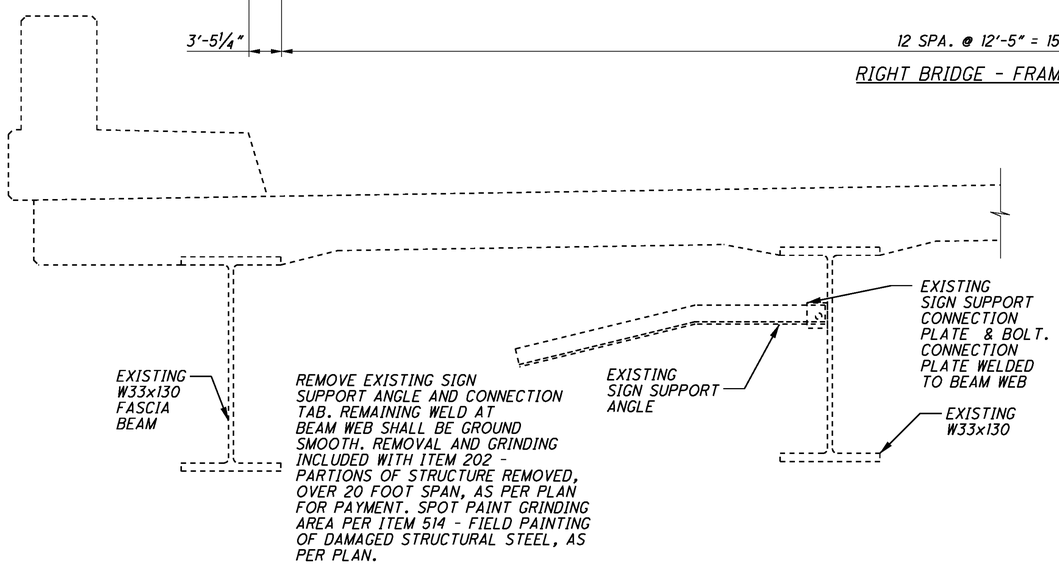

REMOVAL OF EXISTING SIGN SUPPORT DETAIL

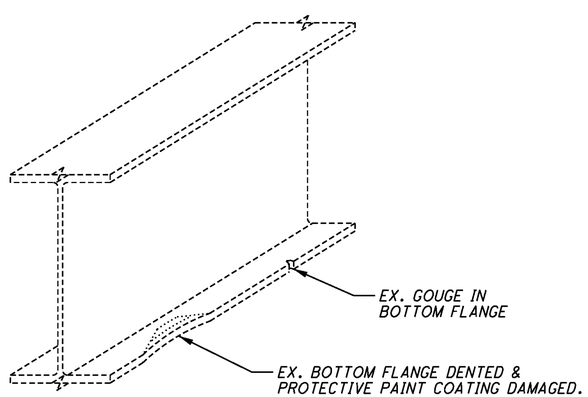

TYPICAL BEAM DAMAGE DETAIL

PROPOSED WORK

1. GRIND BOTTOM FLANGE, AS DIRECTED BY THE ENGINEER, TO REMOVE RUST, NICKS, AND ENHANCE INVESTIGATION FOR CRACK PRESENCE. ALL GRINDING MUST BE DONE CAUTIOUSLY ESPECIALLY IN TENSION ZONES.
2. FOR FLANGE GOUGES DEEPER THAN ¼" IN DEPTH, THE CONTRACTOR SHALL CLEAN THE GOUGE AREA OF STEEL AND PERFORM WELDING REPAIR OF THE GOUGE TO PREVENT CRACK PROPAGATION. GOUGES LESS THAN ¼" IN DEPTH SHALL BE GROUND SMOOTH.
3. THE CONTRACTOR SHALL PERFORM NON-DESTRUCTIVE TESTING (NDT) IN THE AREA USING MAGNETIC PARTICLE EXAMINATION AND/OR DYE PENETRANT SO THAT THE ENGINEER MAY FURTHER INSPECT FOR CRACKS. CONTRACTOR'S PERSONNEL PERFORMING NDT SHALL BE QUALIFIED AS PER 513.25 OF THE CMS.
4. ANY CRACKS, DISCOVERED IN THE BOTTOM FLANGE SHALL BE REPAIRED AS DIRECTED BY THE PROJECT ENGINEER AND AS OUTLINED IN ITEM 513 - STRUCTURAL STEEL, MISC.: CRACK REPAIR.
5. PERFORM STEPS 1 THROUGH 3 FOR EACH OF THE FOUR LOCATIONS.

NOTES:

1. THE ACCEPTED NUMBER OF NDT LOCATIONS AS DESCRIBED IN THIS NOTE WILL BE PAID FOR AT THE CONTRACT UNIT PRICE PER LOCATION. THE PRICE AND PAYMENT SHALL BE FULL COMPENSATION FOR FURNISHING ALL MATERIAL, LABOR, AND EQUIPMENT NECESSARY TO CLEAN, GRIND, AND PERFORM NDT AT THE REPAIR LOCATIONS SHOWN.
2. ALL COSTS ASSOCIATED WITH THE ABOVE DESCRIBED BEAM REPAIRS SHALL BE PAID FOR AT THE CONTRACT PRICE BID UNDER ITEM 513 - STRUCTURAL STEEL, MISC.: BOTTOM FLANGE REPAIR.
3. SPOT PAINT THE DAMAGED AREAS OF THE BOTTOM FLANGES. PAYMENT SHALL BE MADE AT THE CONTRACT BID PRICE UNDER ITEM 514-FIELD PAINTING OF DAMAGED STRUCTURALSTEEL, AS PER PLAN (REFER TO GENERAL NOTES ON SHEET 6 THRU 8 OF 45 FOR ADDITIONAL INFORMATION)
4. REDUCE S.R. 48 NORTHBOUND TRAFFIC LANES FROM THREE DOWN TO ONE TO ACCOMODATE THE BEAM REPAIRS. REFER TO STD. DWG. MT-95.30 AND SHEET 10 OF 45 FOR ADDITIONAL INFORMATION.
5. BEAM REPAIRS SHALL BE COMPLETED AT NIGHT OVER THE COURSE OF ONE WEEKEND.

DESIGN AGENCY
MS COMPANIES
5th Avenue Building
1100 Superior Avenue
Cleveland, OHIO 44114
216.781.9400
Fax 216.781.9401

DESIGNED	DRAWN	REVIEWED	DATE
CAH	RP	JDH	12/10/08
CHECKED	REVISED	STRUCTURE FILE NUMBER	
SRB		5705495	

SUPERSTRUCTURE REHABILITATION PLAN & DETAILS

BRIDGE No: MOT-70-1130R
INTERSTATE 70 OVER S.R. 48

D07-BH-FY2009

PID No. 83358

J:\TS\07\07-229 ODOT District 7 GES\80631\structures\7a-7e Combined\MOT-70-1130(LR)\1130RFP001.dgn 12/15/2008 9:26:37 AM arhayes ODOT_MS_PDF_FULL.plt ODOT_MS_PENTABLE.tbl M-E Companies

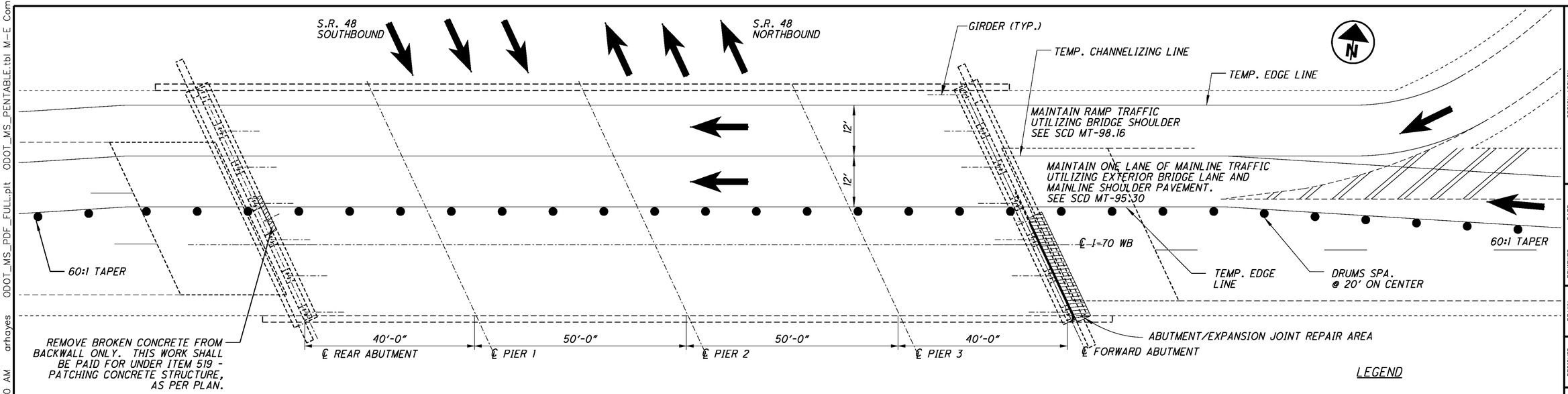

LEGEND

PORTION OF EXISTING STRUCTURE TO BE REMOVED.

LEFT BRIDGE - M.O.T. PLAN

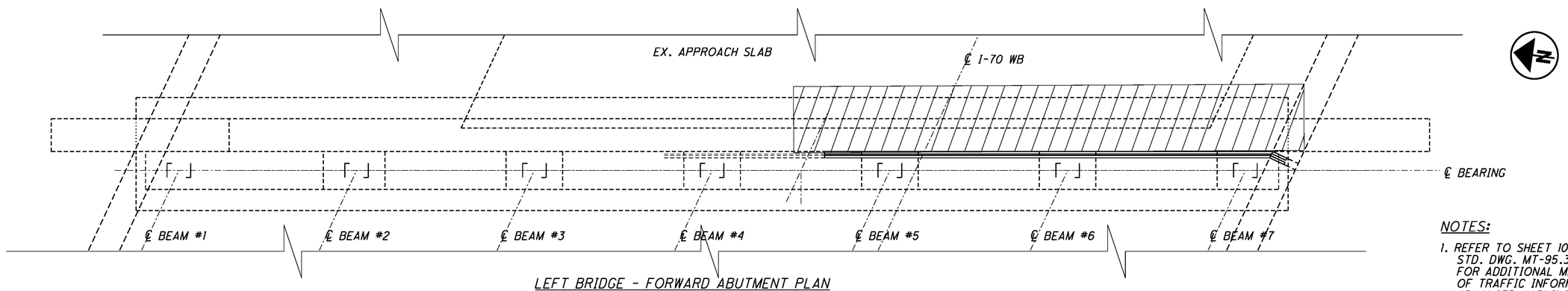

LEFT BRIDGE - FORWARD ABUTMENT PLAN

NOTES:

1. REFER TO SHEET 10 OF 45 & STD. DWG. MT-95.30 & MT-95.50 FOR ADDITIONAL MAINTENANCE OF TRAFFIC INFORMATION AND ADVANCED WARNING SIGNAGE.
2. ALL EXPANSION JOINT REPAIRS SHALL BE COMPLETED AT NIGHT OVER THE COURSE OF ONE WEEKEND.

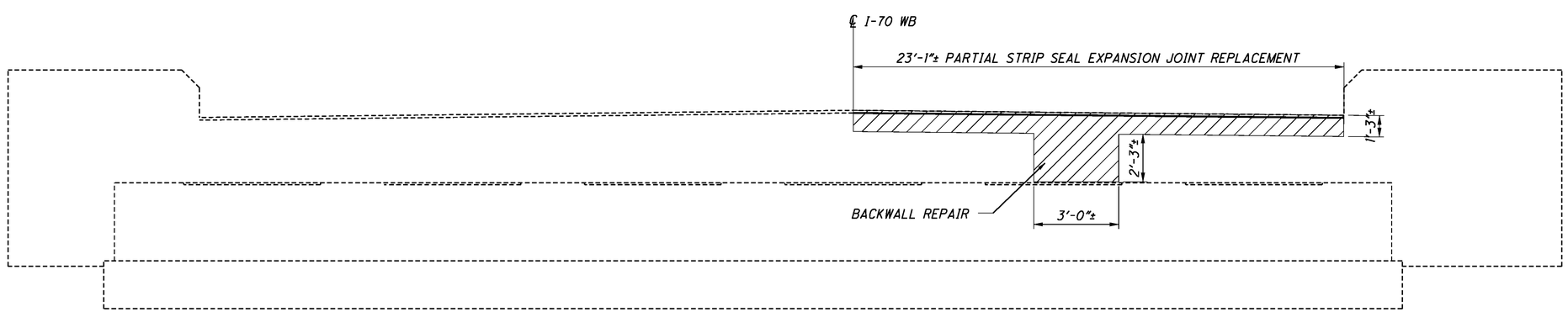

LEFT BRIDGE - FORWARD ABUTMENT ELEVATION

DESIGN AGENCY
MS COMPANIES
1335 Dublin Road
Suite 216-B
Columbus, OH 43215
614-488-4999
614-488-4001 Fax

DATE 12/10/08	REVIEWED JDH
STRUCTURE FILE NUMBER 5705525	
DRAWN RP	REVISED
DESIGNED CAH	CHECKED SRB

EXPANSION JOINT REHABILITATION PLAN

BRIDGE No: MOT-70-1130L
INTERSTATE 70 OVER S.R. 48

D07-BH-FY2009

PID No. 83358

2 / 6

19 / 45

J:\TS\07\07-229 ODOT District 7 GES\80631\structures\7a-7e Combined\MOT-70-1130(LR)\1130RAR001.dgn 12/15/2008 9:26:40 AM arhayes ODOT_MS_PDF_FULL.plt ODOT_MS_PENTABLE.tbl M-E Companies

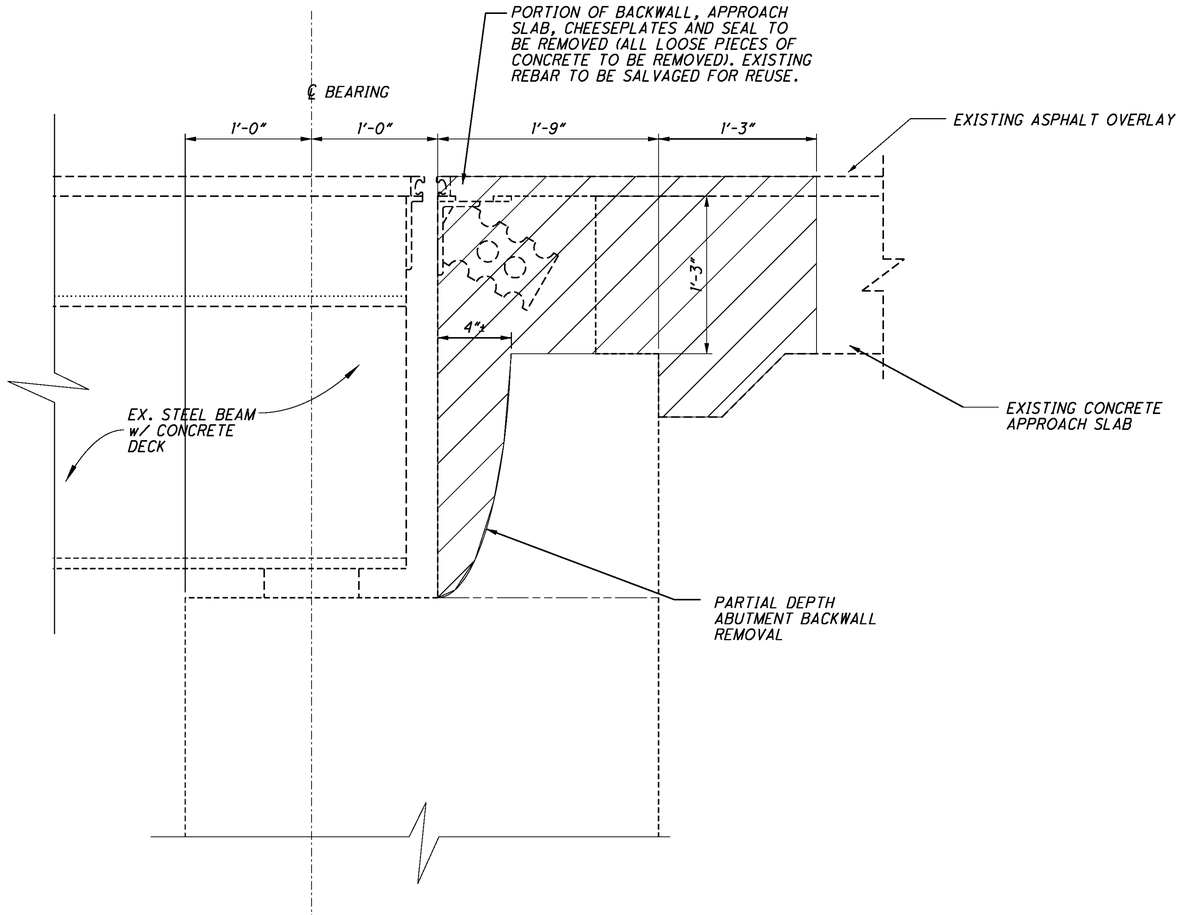

EXISTING EXPANSION JOINT & ABUTMENT DEMOLITION

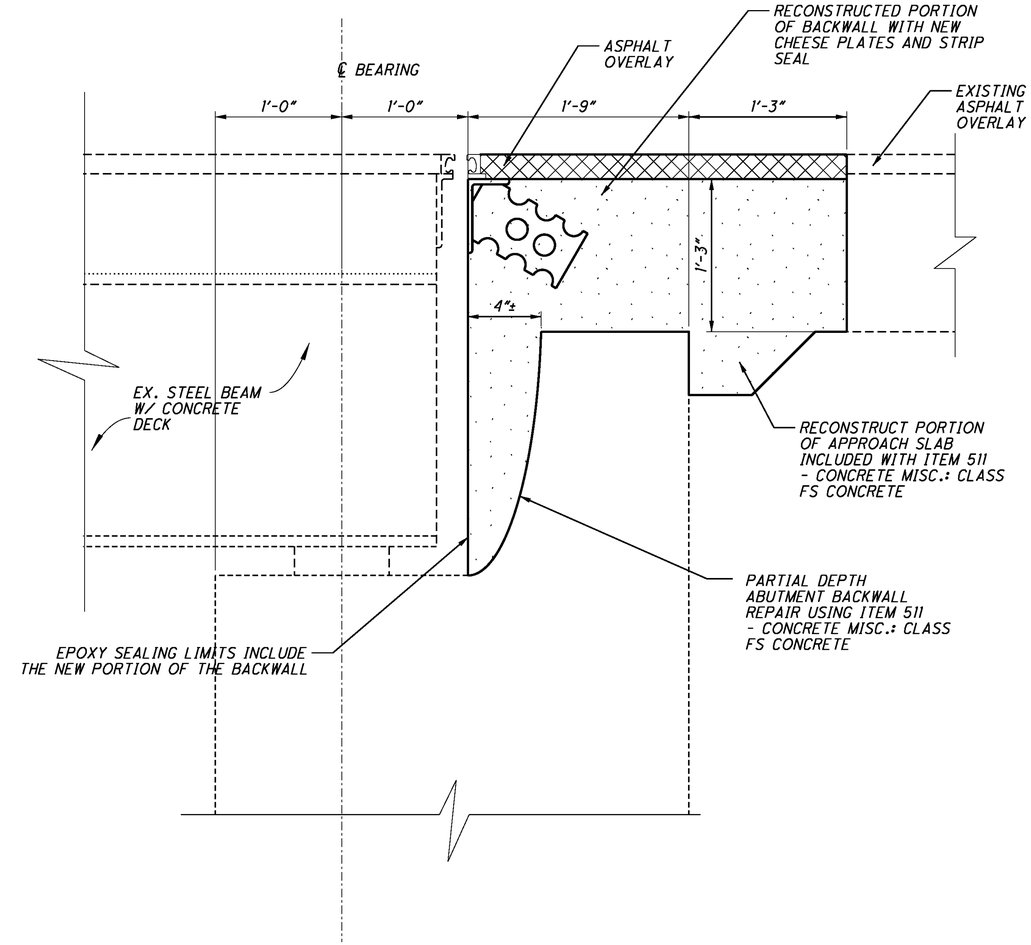

PROPOSED EXPANSION JOINT & ABUTMENT CONSTRUCTION

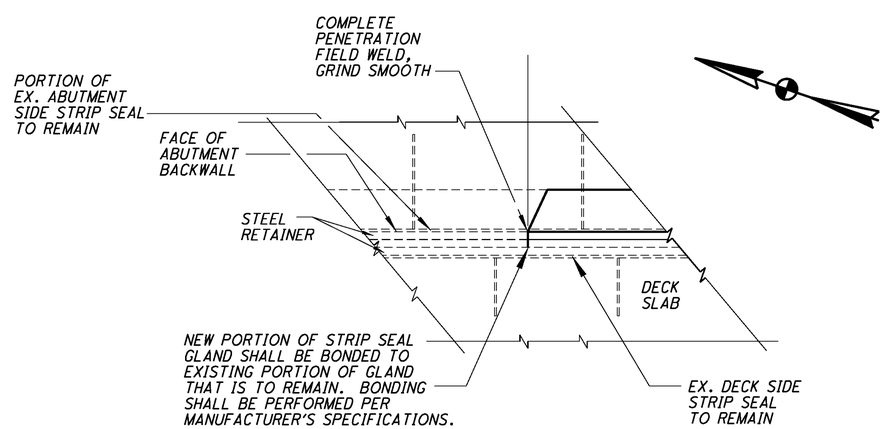

END DAM SPLICE DETAIL

LEFT BRIDGE FORWARD ABUTMENT ONLY

DESIGN AGENCY: M-E COMPANIES

DESIGNED	DRAWN	REVIEWED	DATE
CAH	SRB	JDH	12/10/08
CHECKED	REVISED	STRUCTURE FILE NUMBER	
SRB		5705525	

EXPANSION JOINT REHABILITATION DETAILS

BRIDGE No: MOT-70-1130L
INTERSTATE 70 OVER S.R. 48

D07-BH-FY2009

PID No. 83358

3 / 6

20 / 45

J:\TS\07\07-229 ODOT District 7 GES\80631\structures\7a-7e Combined\MOT-70-1130(LR)\1130RAR001.dgn 1/8/2009 8:41:09 AM arhayes ODOT_MS_PDF_FULL.plt ODOT_MS_PENTABLE.tbl M-E Companies

BEARING NUMBER	EXISTING BEARING HEIGHT (IN)	PROPOSED BEARING HEIGHT (IN)	BEAM SEAT MODIFICATION	* BEAM SEAT ADJUSTMENT (IN)	SIDE LOAD PLATE THICKNESS (IN)	LOAD PLATE THICKNESS (IN)	HR (IN)	HF (IN)	FILL PATCHING REQUIRED
1	2 1/16"	2 5/8"	YES	-1 1/16"	1 1/4"	1/2"	5/8"	3/8"	NO
2	2 1/2"	2 5/8"	YES	-5/8"	1 1/4"	1/2"	5/8"	3/8"	NO
3	3 3/8"	2 5/8"	NO	NA	1 1/4"	3/4"	7/8"	5/8"	NO
4	3 1/2"	2 5/8"	NO	NA	1 1/4"	7/8"	1"	3/4"	NO
5	3 5/8"	2 5/8"	NO	NA	1 1/4"	1"	1 1/8"	7/8"	NO
6	3 1/2"	2 5/8"	NO	NA	1 1/4"	7/8"	1"	3/4"	NO
7	3 1/2"	2 5/8"	NO	NA	1 1/4"	7/8"	1"	3/4"	NO
8	4 1/16"	2 5/8"	NO	NA	1 1/4"	1 7/16"	1 9/16"	1 5/16"	NO
9	4 1/16"	2 5/8"	NO	NA	1 1/4"	1 7/16"	1 9/16"	1 5/16"	NO
10	4 1/16"	2 5/8"	NO	NA	1 1/4"	1 7/16"	1 9/16"	1 5/16"	NO
11	3 15/16"	2 5/8"	NO	NA	1 1/4"	1 5/16"	1 7/16"	1 3/16"	NO
12	3 13/16"	2 5/8"	NO	NA	1 1/4"	1 3/16"	1 5/16"	1 1/16"	NO
13	2 3/4"	2 5/8"	YES	-3/8"	1 1/4"	1/2"	5/8"	3/8"	NO
14	2 1/2"	2 5/8"	YES	-5/8"	1 1/4"	1/2"	5/8"	3/8"	NO
15	3 5/8"	2 5/8"	NO	NA	1 1/4"	1"	1 1/8"	7/8"	NO
16	3 13/16"	2 5/8"	NO	NA	1 1/4"	1 3/16"	1 5/16"	1 1/16"	NO
17	3 3/4"	2 5/8"	NO	NA	1 1/4"	1 1/8"	1 1/4"	1"	NO
18	3 3/8"	2 5/8"	NO	NA	1 1/4"	3/4"	7/8"	5/8"	NO
19	3 1/2"	2 5/8"	NO	NA	1 1/4"	7/8"	1"	3/4"	NO
20	3 1/4"	2 5/8"	NO	NA	1 1/4"	5/8"	3/4"	1/2"	NO
21	4 1/16"	2 5/8"	NO	NA	1 1/4"	1 7/16"	1 9/16"	1 3/16"	NO
22	4 9/16"	2 5/8"	NO	NA	1 1/4"	1 15/16"	2 1/16"	1 13/16"	NO
23	4 3/16"	2 5/8"	NO	NA	1 1/4"	1 9/16"	1 11/16"	1 7/16"	NO
24	3 13/16"	2 5/8"	NO	NA	1 1/4"	1 3/16"	1 5/16"	1 1/16"	NO
25	3 1/4"	2 5/8"	NO	NA	1 1/4"	5/8"	3/4"	1/2"	NO
26	2 3/4"	2 5/8"	YES	-3/8"	1 1/4"	1/2"	5/8"	3/8"	NO

SEE PAGE 22 OF 45 FOR CORRESPONDING BEARING NUMBERS.
* (-) VALUE INDICATES THAT THE BEAM SEAT MUST BE LOWERED.

LOCATION	BEARING DIMENSIONS						STEEL LOAD PLATE			REACTIONS		MAXIMUM
	L	W	ti	te	T	N	A	B	THICKNESS	DL	LL	TOTAL LOAD
BEARINGS 2-5, 22-25	10"	1'-3 1/2"	7/16"	1/4"	2 5/8"	5	11"	1'-4 1/2"	VARIES	26 k	69 k	95 k
BEARINGS 1, 6, 21, 26	9"	1'-3 1/2"	7/16"	1/4"	2 5/8"	5	10"	1'-4 1/2"	VARIES	23 k	56 k	79 k
BEARINGS 8-12, 15-19	10"	1'-3 1/2"	7/16"	1/4"	2 5/8"	5	11"	1'-4 1/2"	VARIES	27 k	73 k	100 k
BEARINGS 7, 13, 14, 20	9"	1'-3 1/2"	7/16"	1/4"	2 5/8"	5	10"	1'-4 1/2"	VARIES	23 k	59 k	82 k

ti = THICKNESS OF INTERNAL LAYER
te = THICKNESS OF EXTERNAL LAYER
T = TOTAL THICKNESS OF ELASTOMERIC BEARING

N = NO. OF STEEL LAMINATES
INTERNAL STEEL LAMINATE THICKNESS = 0.0747"
DUROMETER OF ELASTOMER = 50 DUROMETER

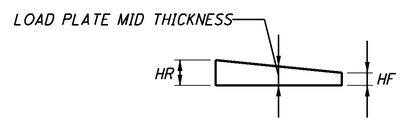

LOAD PLATE DETAIL

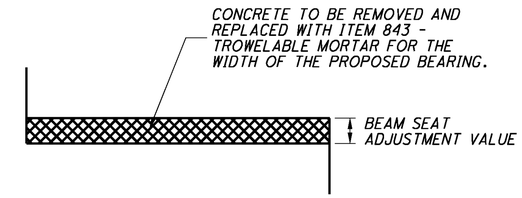

BEAM SEAT MODIFICATION DETAIL

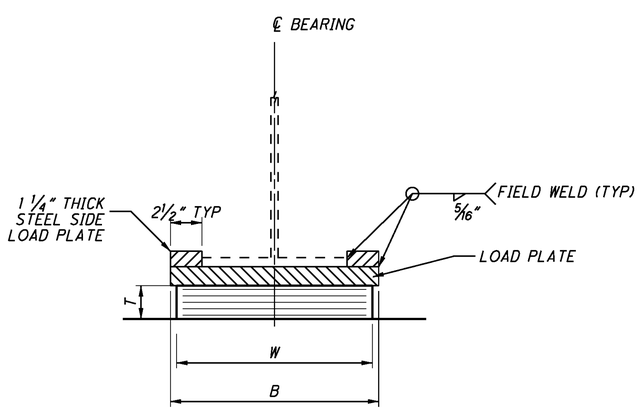

GIRDER CROSS SECTION VIEW

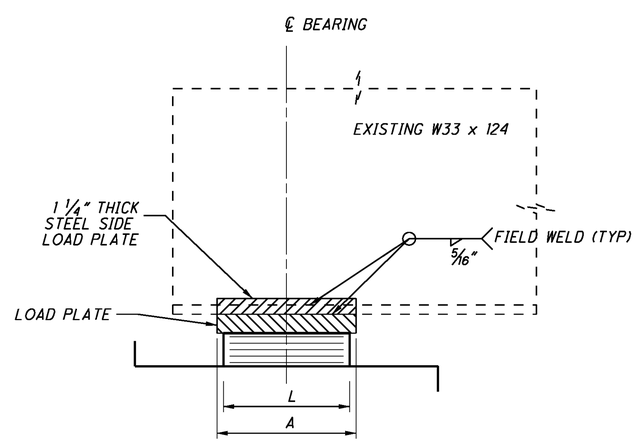

GIRDER ELEVATION VIEW

NOTES:

1. ELEVATION SHOTS OF THE EXISTING GIRDERS SHALL BE TAKEN BEFORE WORK BEGINS AND THEN VERIFIED AFTER WORK IS COMPLETED TO ENSURE THAT THE BEAMS HAVE BEEN RESET TO THE CORRECT ELEVATION. THIS SHALL BE PAID FOR UNDER ITEM 516 -JACKING AND TEMPORARY SUPPORT OF SUPERSTRUCTURE, AS PER PLAN. IF ELEVATIONS DIFFER FROM PREVIOUSLY MEASURED ELEVATIONS, THEN THE CONTRACTOR SHALL FIX THIS PROBLEM AT HIS OWN EXPENSE.
2. THE STEEL GIRDER ENDS SHALL BE CLEANED OF DEBRIS AND DUST. PAINT AND RUST IN THE AREA OF THE BEARING SHALL BE REMOVED BY WAY OF TOOLING, GRINDING OR SAND BLASTING PRIOR TO WELDING. THIS WORK SHALL BE PAID FOR UNDER ITEM 516 - ELASTOMERIC BEARING WITH INTERNAL LAMINATES AND LOAD PLATE (NEOPRENE), AS PER PLAN.
3. SHOP FABRICATE THE LOAD PLATES USING ASTM A709 GRADE 50 STEEL.
4. CONTROL WELDING SO THAT THE PLATE TEMPERATURE AT THE ELASTOMER BONDED SURFACE DOES NOT EXCEED 300°F AS DETERMINED BY THE USE OF PYROMETRIC STICKS OR OTHER TEMPERATURE MONITORING DEVICES.
5. THE STEEL LOAD PLATE SHALL BE BONDED BY VULCANIZATION TO THE ELASTOMER DURING THE MOLDING PROCESS.
6. THE ELASTOMER SHALL HAVE A HARDNESS OF 50 DURAMETER. THE BEARINGS WERE DESIGNED UNDER DIVISION 1, SECTION 14.6.6 (METHOD A) OF THE AASHTO STANDARD SPECIFICATIONS FOR HIGHWAY BRIDGES.
7. IF BEARING AREA HAS A SLOPE THAT EXCEEDS 1/4" PER FOOT IN ANY DIRECTION, THE CONTRACTOR SHALL REMOVE THE TOP PORTION OF THE BEARING AREA CONCRETE AND USE ITEM 843 - PATCHING CONCRETE STRUCTURE WITH TROWABLE MORTAR, AS PER PLAN TO OBTAIN A LEVEL SURFACE.
8. FILL PATCHING CONSISTS OF FILLING IN THE FOOTPRINT OF THE EXISTING BEARINGS WITH GROUT TO ACHIEVE A BEARING SURFACE THAT IS LEVEL WITH THE REMAINING BEAM SEAT. THIS ITEM IS PAID FOR UNDER ITEM 843 - PATCHING CONCRETE STRUCTURE WITH TROWELABLE MORTAR, AS PER PLAN.
9. REFER TO SHEET 6 OF 45 FOR BEAM JACKING AND CONCRETE PATCHING NOTES.
10. THE UNIT BID PRICE INCLUDES ALL MATERIALS, LABOR, SHOP COATING, TESTING AND INCIDENTALS NECESSARY TO FURNISH AND INSTALL LAMINATED ELASTOMERIC BEARINGS INCLUDING STEEL LOAD PLATES. PAYMENT WILL BE INCLUDED WITH THE APPROPRIATE 516 ITEM.
11. THE STEEL LOAD PLATE AND AREAS ON THE BEAM WHERE PAINT WAS REMOVED FOR WELDING PURPOSES SHALL HAVE TOUCH UP PAINT APPLIED. THIS PAINTING SHALL BE PAID FOR UNDER ITEM 514 - FIELD PAINTING OF DAMAGED STRUCTURAL STEEL, AS PER PLAN.
12. CONTRACTOR SHALL FIELD MEASURE THE EXISTING BEARING HEIGHTS BEFORE ORDERING ANY MATERIALS.

DESIGN AGENCY
MS COMPANIES
MS Companies Southwest
Contact Info: Carl Hayes, P.E.
Contact No: (214) 215-0300
Fax No: (214) 215-0301

DESIGNED	DRAWN	REVIEWED	DATE
SRB	SRB	JDH	12/10/08
CHECKED	REVISED	STRUCTURE FILE NUMBER	
CAH		5705525 & 5705495	

GIRDER BEARING DETAILS

BRIDGE No: MOT-70-1130 L/R
INTERSTATE 70 OVER S.R. 48

D07-BH-FY2009
PID No. 83358

J:\TS\07\07-229 ODOT District 7 GES\80631\structures\7a-7e Combined\MOT-70-1130(LR)\SD001.dgn 1/8/2009 8:41:11 AM arhayes ODOT_MS_PDF_FULL.plt ODOT_MS_PENTABLE.tbl M-E Companies, Inc.

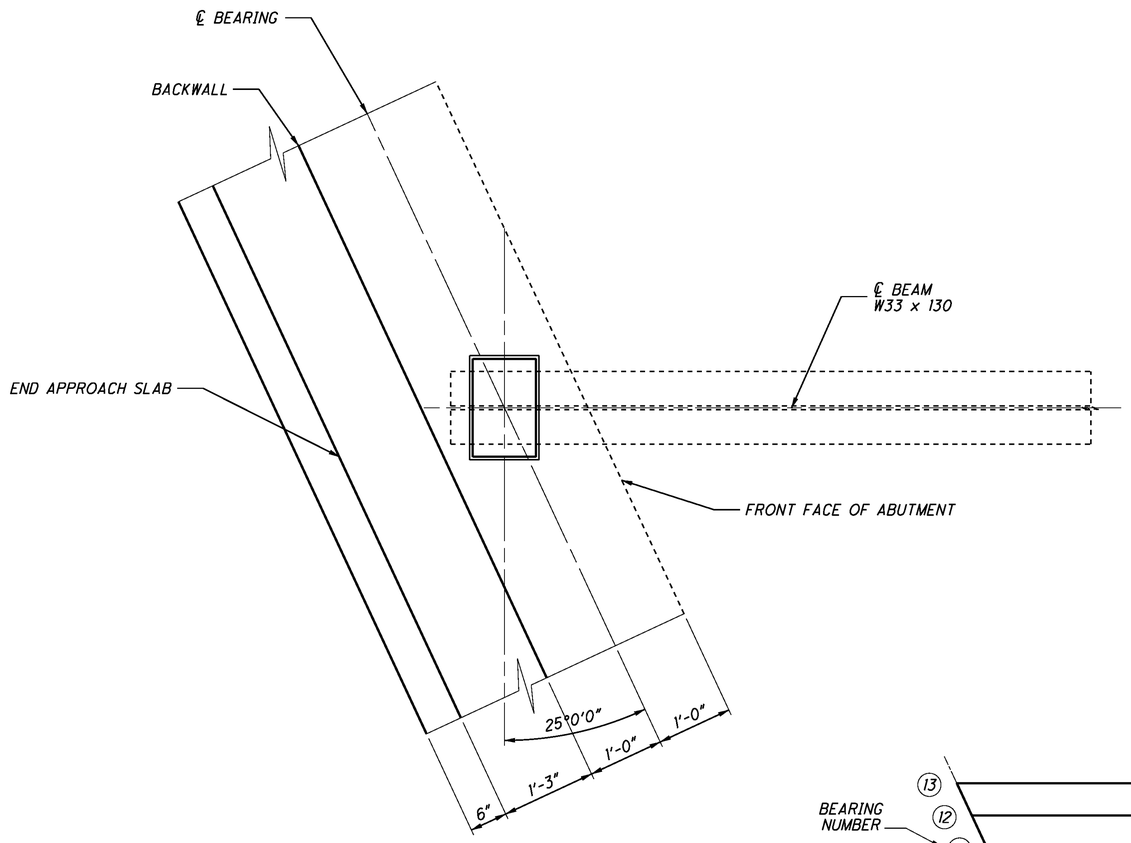

BEARING PLAN VIEW

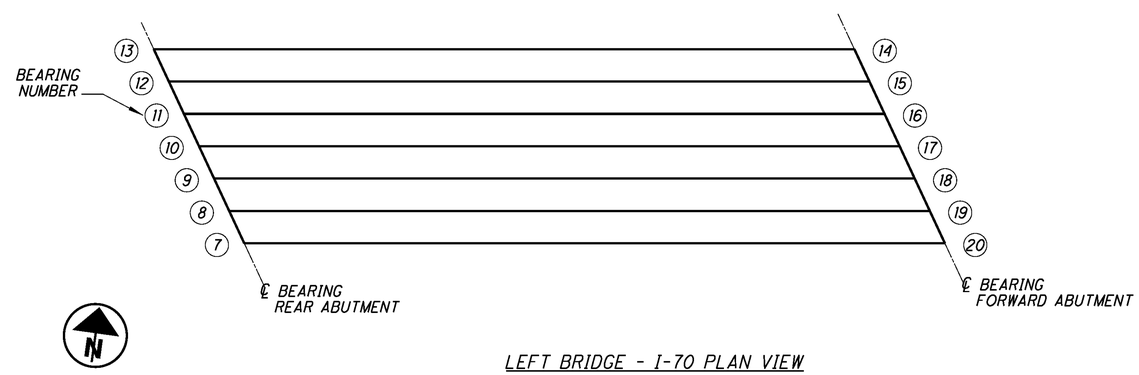

LEFT BRIDGE - I-70 PLAN VIEW

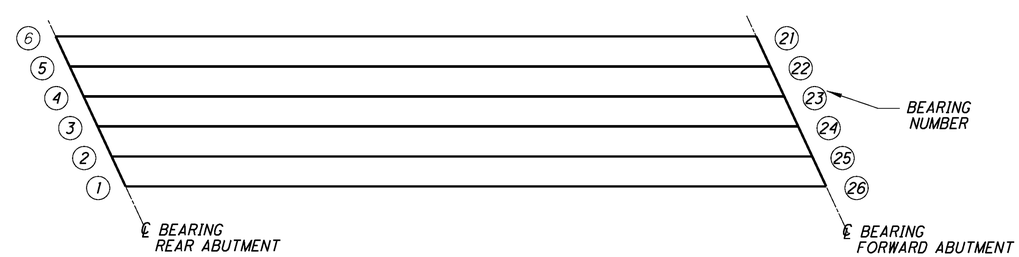

RIGHT BRIDGE - I-70 PLAN VIEW

DESIGN AGENCY
MEC COMPANIES
635 Brookside Boulevard
Westerville, OH 43081
Contacts: CA/TOLA
614-839-4200 ext. 33
Fax 614-839-4201

DESIGNED	DRAWN	REVIEWED	DATE
SRB	SRB	JDH	12/10/08
CHECKED	REVISED	STRUCTURE FILE NUMBER	
CAH		5705525 & 5705495	

GIRDER BEARING DETAILS
BRIDGE No: MOT-70-1130 L/R
INTERSTATE 70 OVER S.R. 48

D07-BH-FY2009
PID No. 83358

J:\TS\07\07-229 ODOT District 7 GES\80631\structures\7a-7e Combined\MOT-70-1130(LR)\SD001.dgn 12/15/2008 9:26:43 AM arhayes ODOT_MS_PDF_FULL.plt ODOT_MS_PENTABLE.tbl M-E Companies, Inc

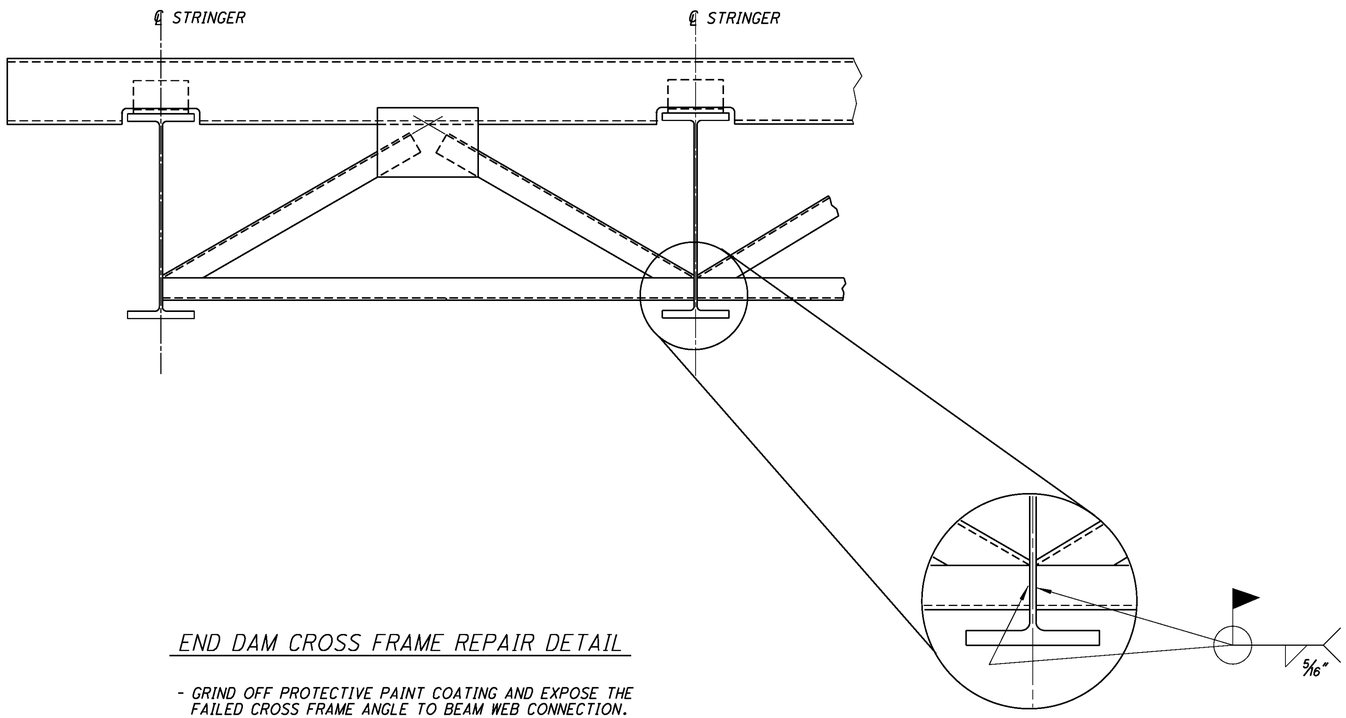

END DAM CROSS FRAME REPAIR DETAIL

- GRIND OFF PROTECTIVE PAINT COATING AND EXPOSE THE FAILED CROSS FRAME ANGLE TO BEAM WEB CONNECTION.
- GRIND OFF EXISTING WELD MATERIAL.
- REATTACH THE ANGLES TO THE BEAM WEB BY WELDING.
- SPOT PAINT THE CONNECTION ONCE THE WELD HAS BEEN APPROVED BY THE ENGINEER. ALL LABOR, MATERIALS AND EQUIPMENT REQUIRED TO COMPLETE THIS TASK SHALL BE PAID FOR UNDER ITEM 514 - FIELD PAINTING OF DAMAGED STRUCTURAL STEEL, AS PER PLAN.
- CONTRACTOR SHALL INSPECT ALL OF THE END DAM CROSS FRAMES FOR BOTH BRIDGES AND REPAIR ALL DAMAGED ANGLE TO BEAM WEB CONNECTIONS AS DIRECTED BY THE ENGINEER.
- A QUANTITY OF 2 CROSS FRAMES HAS BEEN PROVIDED FOR THIS WORK; ONE PER BRIDGE. ALERT THE PROJECT ENGINEER SHOULD MORE THAN 2 REPAIR LOCATIONS BE IDENTIFIED. ALL LABOR, MATERIALS AND EQUIPMENT REQUIRED TO COMPLETE THIS TASK SHALL BE PAID FOR UNDER ITEM ITEM 513 - STRUCTURAL STEEL MISC.: STEEL PREPARATION, REPAIR AND NON-DESTRUCTIVE TESTING.

DESIGN AGENCY
MS COMPANIES
LAN Engineering, Surveying & Mapping Consultants & Contractors
DESIGNED CAH | DRAWN CAH | REVIEWED JDH | DATE 12/10/08
CHECKED SRB | REVISED | STRUCTURE FILE NUMBER 5705525 & 5705495

END DAM CROSS FRAME REHABILITATION DETAILS

BRIDGE No.: MOT-70-1130 L/R
INTERSTATE 70 OVER S.R. 48

D07-BH-FY2009
PID No. 83358

J:\TS\07\07-229 ODOT District 7 GES\80631\structures\7a-7e Combined\MOT-70-1130(LR)\1130LSD001.dgn 12/15/2008 9:26:44 AM arhayes ODOT_MS_PDF_FULL.plt ODOT_MS_PENTABLE.tbl M-E Companies

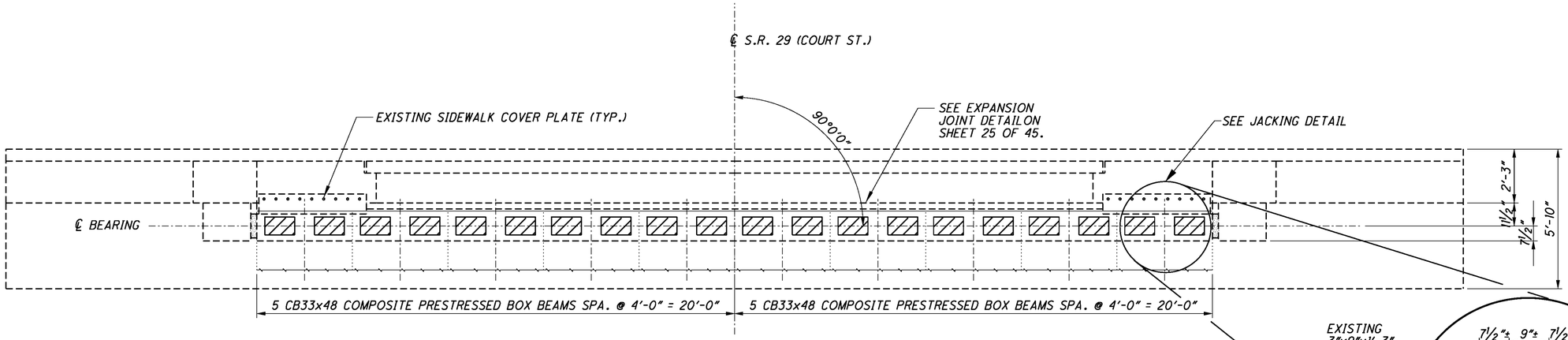

NORTH ABUTMENT PLAN

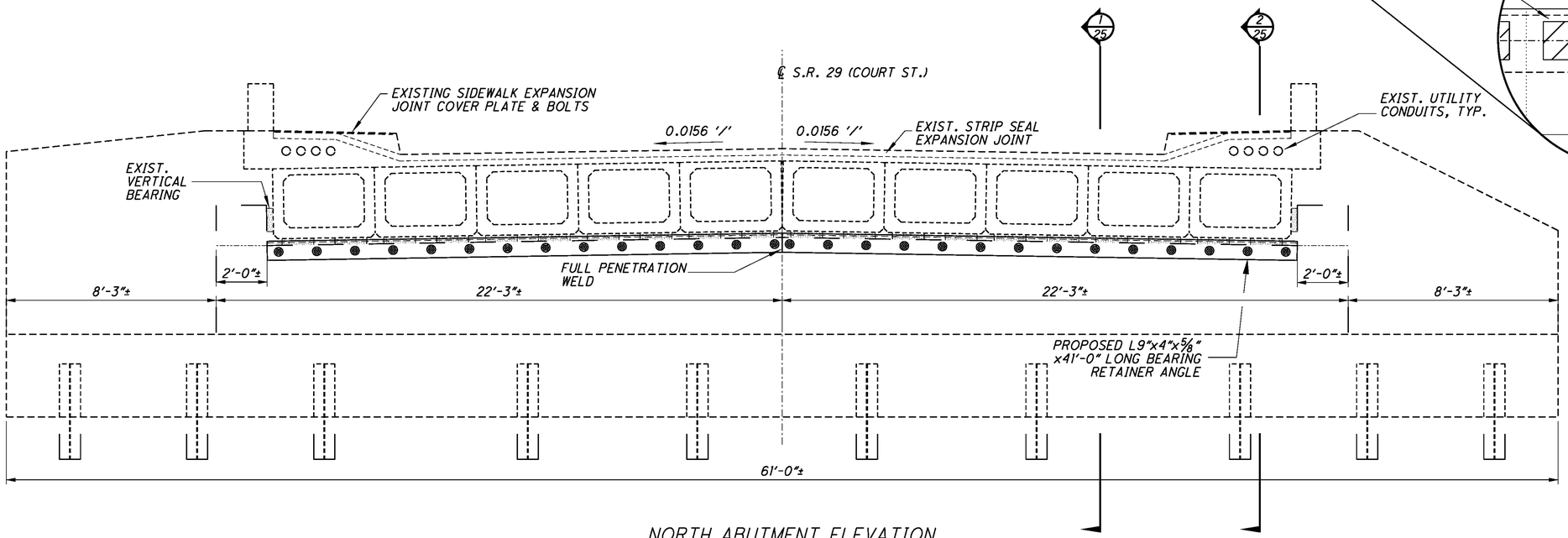

NORTH ABUTMENT ELEVATION

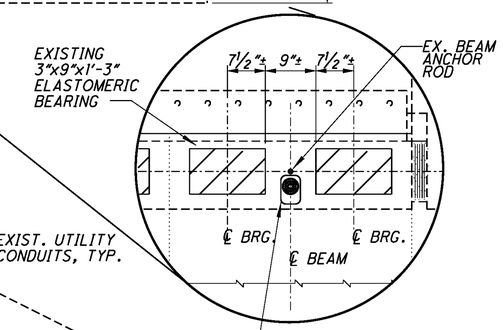

PLACE HYDRAULIC JACK BETWEEN THE TWO ELASTOMERIC BEARINGS DESIGNATED FOR EACH PRESTRESSED BOX BEAM AND AS CLOSE AS POSSIBLE TO THE ABUTMENT CENTERLINE OF BEARING TO ENSURE THAT THE JACK IS BEARING ON THE SOLID CONCRETE BOX BEAM END DIAPHRAGM. REFER TO JACKING NOTE ON SHEET 6 OF 45 FOR ALTERNATE METHOD.

JACKING DETAIL

REHABILITATION WORK FOR SHE-29-1744
SR 29 (COURT ST.) OVER GREAT MIAMI RIVER

- REMOVE STATIONARY SIDEWALK EXPANSION JOINT COVER PLATES TO ACCOMMODATE BRIDGE JACKING.
- RAISE BRIDGE & RESET BOX BEAM BEARING ELASTOMERIC BEARING PADS FOR NORTH ABUTMENT ONLY. MAXIMUM JACKING HEIGHT LIMITED TO ¼" TO PREVENT DAMAGE TO SIDEWALK CONDUITS OR VERTICAL BEARINGS. ALL BOX BEAMS TO BE LIFTED SIMULTANEOUSLY. CLEAN BEARING SEAT OF DEBRIS DURING BEARING RESET.
- CONTRACTOR SHALL CLEAN EXISTING EXPANSION JOINT FILLER FROM STRIP SEAL EXPANSION JOINT AND REINSTALL THE STRIP SEAL EXPANSION JOINT AFTER THE BEARING RESET. THE CONTRACTOR SHALL TAKE CARE NOT TO DAMAGE THE STRIP SEAL GLAND IN THE PROCESS.
- ANY DAMAGE TO STRIP SEAL GLAND DURING CLEANING OR ANY DAMAGE TO BEARING AND/OR CONDUITS AS A RESULT OF THE JACKING PROCESS SHALL BE REPAIRED AT THE CONTRACTOR'S EXPENSE.
- INSTALL NEW GALVANIZED BEARING RETAINER ANGLE AT NORTH ABUTMENT. SEE DETAILS ON SHEET 25 OF 45.

NOTES:

1. SLOPE BEARING RETAINER AS REQUIRED TO MATCH SLOPE OF EXISTING NORTH ABUTMENT BEAM SEAT.
2. UNLESS PAID FOR UNDER OTHER ITEMS, ALL COSTS ASSOCIATED WITH THE PROPOSED WORK SHALL BE PAID UNDER THE CONTRACT PRICE BID UNDER ITEM 516 - RESET BEARING DEVICES, AS PER PLAN.

DESIGN AGENCY
MS COMPANIES
MS Engineering Services, Inc.
Contact: A. Cotrill
Phone: (513) 563-1199
Fax: 88-4001

DESIGNED	DRAWN	REVIEWED	DATE
CAH	RP	JDH	12/10/08
CHECKED	REVISED	STRUCTURE FILE NUMBER	
SRB		7500254	

EXPANSION JOINT REHABILITATION PLAN
BRIDGE No: SHE-29-1744
S.R. 29 (COURT ST.) OVER THE GREAT MIAMI RIVER

D07-BH-FY2009
PID No. 83358

J:\TS\07\07-229 ODOT District 7 GES\80631\structures\7a-7e Combined\SHE-29-1744\1744CEX001.dgn 12/15/2008 9:26:46 AM arhayes ODOT_MS_PDF_FULL.plt ODOT_MS_PENTABLE.tbl M-E Companies,

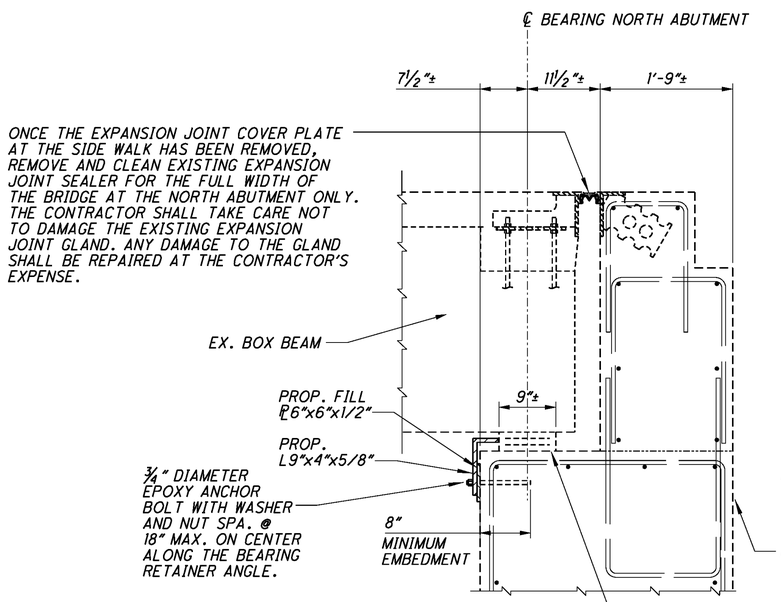

TYPICAL EXPANSION JOINT DETAIL

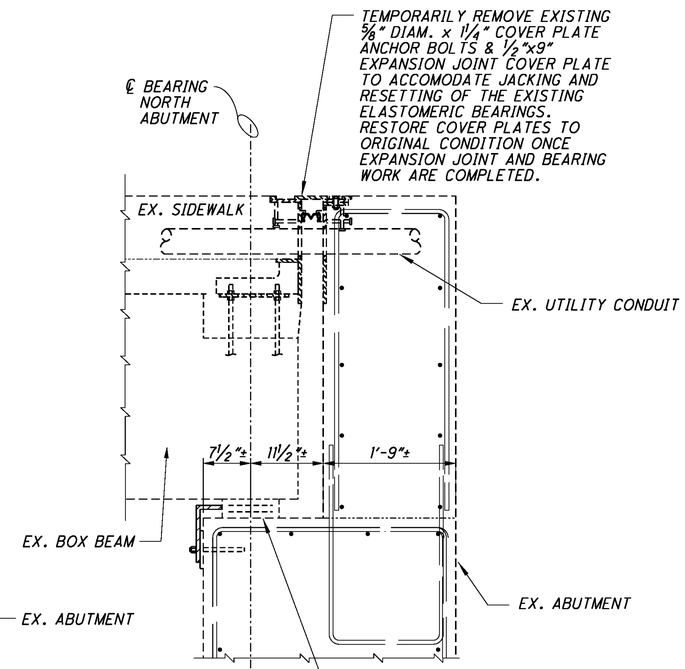

EXPANSION JOINT DETAIL AT SIDEWALK

NOTE:
1. STRUCTURAL STEEL, WELDING, AND ANCHOR BOLTS INCLUDED WITH ITEM 513 - STRUCTURAL STEEL MEMBERS, LEVEL UF, AS PER PLAN FOR PAYMENT.

DESIGN AGENCY
MS COMPANIES
5500 Rockside Road, Suite 400
Independence, OH 44131
Cleveland, OH 216.524.1000
Columbus, OH 614.888.4250
Fax 216-901

DESIGNED	DRAWN	REVIEWED	DATE
CAH	CAH	JDH	12/10/08
CHECKED	REVISED	STRUCTURE FILE NUMBER	
SRB		7500254	

EXPANSION JOINT REHABILITATION DETAILS
BRIDGE No: SHE-29-1744
S.R 29 (COURT ST.) OVER THE GREAT MIAMI RIVER

D07-BH-FY2009
PID No. 83358

2/2

25/45

J:\TS\07\07-229 ODOT District 7 GES\80631\structures\7a-7e Combined\SHE-29-1744\1744CEX001.dgn 12/15/2008 9:26:47 AM arhayes ODOT_MS_PDF_FULL.plt ODOT_MS_PENTABLE.tbl M-E Companies,

BEARING NUMBER	EXISTING BEARING HEIGHT (IN)	PROPOSED BEARING HEIGHT (IN)	BEAM SEAT MODIFICATION	* BEAM SEAT ADJUSTMENT (IN)	SIDE LOAD PLATE THICKNESS (IN)	FILL PATCHING REQUIRED
1	2 5/8"	2 7/16"	YES	3/16"	1 1/4"	NO
2	2 1/2"	2 7/16"	YES	1/8"	1 1/4"	NO
3	2 1/2"	2 7/16"	YES	1/8"	1 1/4"	NO
4	2 3/4"	2 7/16"	YES	5/16"	1 1/4"	NO
5	2 1/2"	2 7/16"	YES	1/8"	1 1/4"	NO
6	2 3/8"	2 7/16"	YES	0"	1 1/4"	NO
7	2 1/2"	2 7/16"	YES	1/8"	1 1/4"	NO
8	2 3/8"	2 7/16"	YES	0"	1 1/4"	YES
9	2 5/8"	2 7/16"	YES	3/16"	1 1/4"	NO
10	2 5/8"	2 7/16"	YES	3/16"	1 1/4"	NO
11	2 1/2"	2 7/16"	YES	1/8"	1 1/4"	YES
12	2 1/2"	2 7/16"	YES	1/8"	1 1/4"	YES
13	2 3/16"	2 7/16"	YES	-1/4"	1 1/4"	YES
14	2 1/4"	2 7/16"	YES	-1/8"	1 1/4"	YES
15	2 1/2"	2 7/16"	YES	1/8"	1 1/4"	YES
16	2 3/4"	2 7/16"	YES	5/16"	1 1/4"	YES
17	2 3/4"	2 7/16"	YES	5/16"	1 1/4"	NO
18	2 1/2"	2 7/16"	YES	1/8"	1 1/4"	YES
19	2 1/2"	2 7/16"	YES	1/8"	1 1/4"	YES
20	2 3/4"	2 7/16"	YES	5/16"	1 1/4"	YES
21	2 5/8"	2 7/16"	YES	3/16"	1 1/4"	YES
22	2 7/8"	2 7/16"	YES	7/16"	1 1/4"	NO
23	2 5/8"	2 7/16"	YES	3/16"	1 1/4"	YES
24	2 1/2"	2 7/16"	YES	1/8"	1 1/4"	YES

* (-) VALUE INDICATES THAT THE BEAM SEAT MUST BE LOWERED

LOCATION	BEARING DIMENSIONS						STEEL LOAD PLATE			REACTIONS		MAXIMUM
	L	W	ti	te	T	N	A	B	THICKNESS	DL	LL	TOTAL LOAD
BEARINGS 2-5, 8-11, 14-17, 20-23	10 1/2"	1'-2 1/2"	1/2"	5/16"	2 7/16"	4	11 1/2"	2 1/2"	1 1/4"	19 k	67 k	86 k
BEARINGS 1, 6, 7, 12, 13, 18, 19, 24	10 1/2"	1'-2 1/2"	1/2"	5/16"	2 7/16"	4	11 1/2"	2 1/2"	1 1/4"	17 k	55 k	72 k

ti = THICKNESS OF INTERNAL LAYER
te = THICKNESS OF EXTERNAL LAYER
T = TOTAL THICKNESS OF ELASTOMERIC BEARING

N = NO. OF STEEL LAMINATES
INTERNAL STEEL LAMINATE THICKNESS = 0.0747"
DUROMETER OF ELASTOMER = 50 DUROMETER

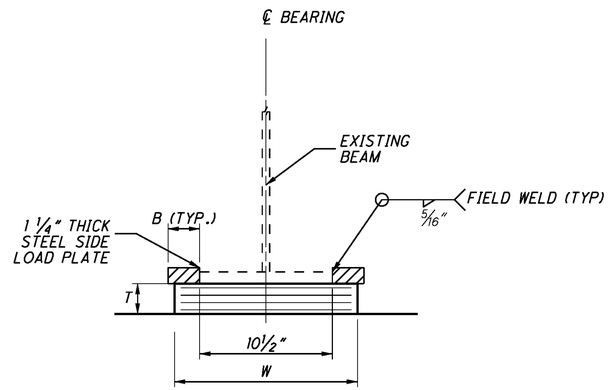

GIRDER CROSS SECTION VIEW

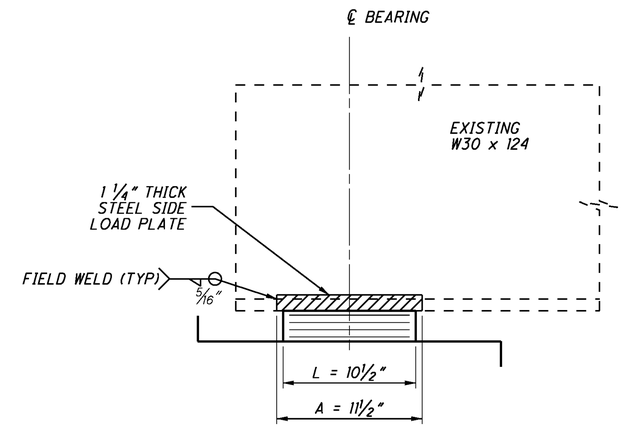

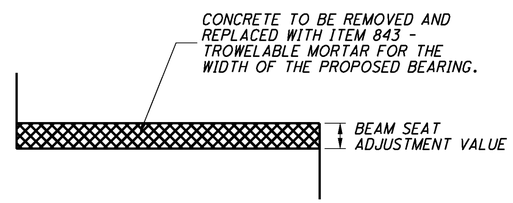

BEAM SEAT MODIFICATION DETAIL

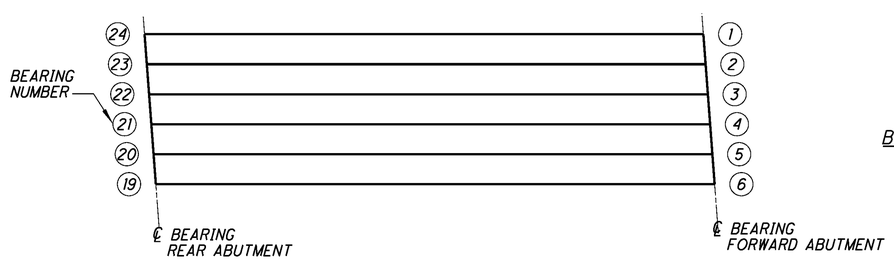

I-75 SOUTHBOUND PLAN VIEW

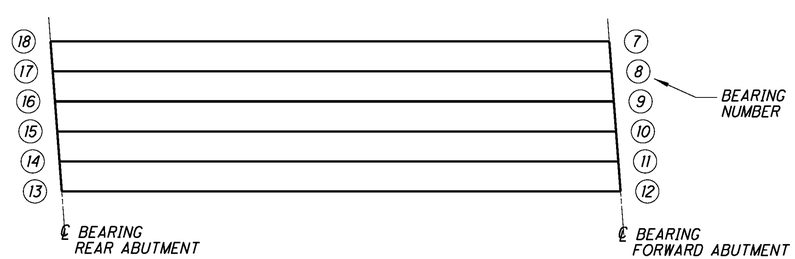

I-75 NORTHBOUND PLAN VIEW

NOTES:

1. ELEVATION SHOTS OF THE EXISTING GIRDERS SHALL BE TAKEN BEFORE WORK BEGINS AND THEN VERIFIED AFTER WORK IS COMPLETED TO ENSURE THAT THE BEAMS HAVE BEEN RESET TO THE CORRECT ELEVATION. THIS SHALL BE PAID FOR UNDER ITEM 516 -JACKING AND TEMPORARY SUPPORT OF SUPERSTRUCTURE, AS PER PLAN. IF ELEVATIONS DIFFER FROM PREVIOUSLY MEASURED ELEVATIONS, THEN THE CONTRACTOR SHALL FIX THIS PROBLEM AT HIS OWN EXPENSE.
2. THE STEEL GIRDER ENDS SHALL BE CLEANED OF DEBRIS AND DUST. PAINT AND RUST IN THE AREA OF THE BEARING SHALL BE REMOVED BY WAY OF TOOLING, GRINDING OR SAND BLASTING PRIOR TO WELDING. THIS WORK SHALL BE PAID FOR UNDER ITEM 516 - ELASTOMERIC BEARING WITH INTERNAL LAMINATES AND LOAD PLATE (NEOPRENE), AS PER PLAN.
3. SHOP FABRICATE THE LOAD PLATES USING ASTM A709 GRADE 50 STEEL.
4. CONTROL WELDING SO THAT THE PLATE TEMPERATURE AT THE ELASTOMER BONDED SURFACE DOES NOT EXCEED 300°F AS DETERMINED BY THE USE OF PYROMETRIC STICKS OR OTHER TEMPERATURE MONITORING DEVICES.
5. THE STEEL LOAD PLATE SHALL BE BONDED BY VULCANIZATION TO THE ELASTOMER DURING THE MOLDING PROCESS.
6. THE ELASTOMER SHALL HAVE A HARDNESS OF 50 DURAMETER. THE BEARINGS WERE DESIGNED UNDER DIVISION 1, SECTION 14.6.6 (METHOD A) OF THE AASHTO STANDARD SPECIFICATIONS FOR HIGHWAY BRIDGES.
7. IF BEARING AREA HAS A SLOPE THAT EXCEEDS 1/4" PER FOOT IN ANY DIRECTION, THE CONTRACTOR SHALL REMOVE THE TOP PORTION OF THE BEARING AREA CONCRETE AND USE ITEM 843 - PATCHING CONCRETE STRUCTURE WITH TROWABLE MORTAR, AS PER PLAN TO OBTAIN A LEVEL SURFACE.
8. FILL PATCHING CONSISTS OF FILLING IN THE FOOTPRINT OF THE EXISTING BEARINGS WITH GROUT TO ACHIEVE A BEARING SURFACE THAT IS LEVEL WITH THE REMAINING BEAM SEAT. THIS ITEM IS PAID FOR UNDER ITEM 843 - PATCHING CONCRETE STRUCTURE WITH TROWELABLE MORTAR, AS PER PLAN.
9. REFER TO SHEET 6 OF 45 FOR BEAM JACKING AND CONCRETE PATCHING NOTES.
10. THE UNIT BID PRICE INCLUDES ALL MATERIALS, LABOR, SHOP COATING, TESTING AND INCIDENTALS NECESSARY TO FURNISH AND INSTALL LAMINATED ELASTOMERIC BEARINGS INCLUDING STEEL LOAD PLATES. PAYMENT WILL BE INCLUDED WITH THE APPROPRIATE 516 ITEM.
11. THE STEEL LOAD PLATE AND AREAS ON THE BEAM WHERE PAINT WAS REMOVED FOR WELDING PURPOSES SHALL HAVE TOUCH UP PAINT APPLIED. THIS PAINTING SHALL BE PAID FOR UNDER ITEM 514 - FIELD PAINTING OF DAMAGED STRUCTURAL STEEL, AS PER PLAN.
12. CONTRACTOR SHALL FIELD MEASURE THE EXISTING BEARING HEIGHTS BEFORE ORDERING ANY MATERIALS.

DESIGN AGENCY
MS COMPANIES

DESIGNED SRB | CHECKED CAH | DRAWN SRB | REVISED | REVIEWED JDH | DATE 12/10/08 | STRUCTURE FILE NUMBER 7501773 & 7501803

GIRDER BEARING DETAILS
BRIDGE No: SHE-75-0614 L/R
OVER CAMPBELL ROAD

D07-BH-FY2009
PID No. 83358

J:\TS\07\07-229 ODOT District 7 GES\80631\structures\7a-7e Combined\SHE-75-0614\Sheets\0614_SD001.dgn 1/8/2009 8:41:18 AM arhayes ODOT_MS_PDF_FULL.plt ODOT_MS_PENTABLE.tbl M-E Compa

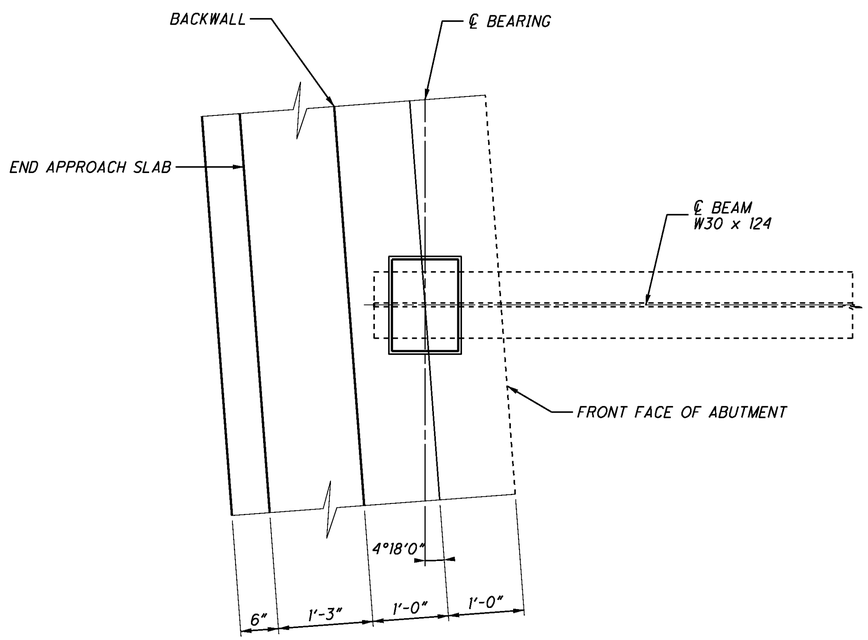

BEARING PLAN VIEW

DESIGN AGENCY
MS COMPANIES
635 Brookside Boulevard
Westerville, OH 43081
Contact U. CIOTOLA
614-818-4900 ext. 3537
Fax 614-818-4901

DESIGNED	DRAWN	REVIEWED	DATE
SRB	SRB	JDH	12/10/08
CHECKED	REVISED	STRUCTURE FILE NUMBER	
CAH		7501773 & 7501803	

GIRDER BEARING DETAILS
BRIDGE No: SHE-75-0614 L/R
OVER CAMPBELL ROAD

D07-BH-FY2009
PID No. 83358

J:\TS\07\07-229 ODOT District 7 GES\80631\structures\7a-7e Combined\SHE-75-0614\Sheets\SD001.dgn 12/15/2008 9:26:49 AM arhayes ODOT_MS_PDF_FULL.plt ODOT_MS_PENTABLE.tbl M-E Companies

BEARING NUMBER	EXISTING BEARING HEIGHT (IN)	PROPOSED BEARING HEIGHT (IN)	LOAD PLATE THICKNESS (IN)	HP 10x42 HEIGHT (IN)	FILL PATCHING REQUIRED
1	6 1/8"	3 1/16"	1"	2 1/16"±	YES
2	6 13/16"	3 1/16"	1"	2 13/16"±	YES
3	7 3/16"	3 1/16"	1"	3 1/8"±	NO
4	6 15/16"	3 1/16"	1"	2 15/16"±	NO
5	7 13/16"	3 1/16"	1"	3 3/4"±	NO
6	7 15/16"	3 1/16"	1"	3 7/8"±	YES
7	8 7/8"	3 1/16"	1"	4 9/16"±	YES
8	9 3/8"	3 1/16"	1"	5 1/16"±	YES
9	5 3/4"	3 1/16"	1"	1 7/16"±	YES
10	6 1/8"	3 1/16"	1"	1 13/16"±	YES
11	6 1/8"	3 1/16"	1"	1 13/16"±	YES
12	6 3/8"	3 1/16"	1"	2 1/16"±	YES
13	6 1/4"	3 1/16"	1"	1 15/16"±	YES
14	5 1/2"	3 1/16"	1"	1 1/4"±	YES
15	5 3/4"	3 1/16"	1"	1 11/16"±	YES
16	6"	3 1/16"	1"	1 15/16"±	YES
17	6 3/8"	3 1/16"	1"	2 5/16"±	YES
18	6 3/8"	3 1/16"	1"	2 5/16"±	YES
19	6 5/8"	3 1/16"	1"	2 9/16"±	YES
20	6 13/16"	3 1/16"	1"	2 13/16"±	YES
21	7 11/16"	3 1/16"	1"	3 5/8"±	YES
22	8 1/2"	3 1/16"	1"	4 1/2"±	YES
23	6 3/4"	3 1/16"	1"	2 11/16"±	YES
24	6 1/2"	3 1/16"	1"	2 7/16"±	YES
25	6"	3 1/16"	1"	1 15/16"±	YES
26	6 1/4"	3 1/16"	1"	2 3/16"±	YES
27	6 1/8"	3 1/16"	1"	2 1/16"±	YES
28	6 13/16"	3 1/16"	1"	2 13/16"±	YES

THE BEARINGS FOR THE RIGHT REAR ABUTMENT HAVE BEEN LOWERED BY 1/4" IN ORDER TO ALIGN WITH THE EXISTING APPROACH SLAB.

LOCATION	BEARING DIMENSIONS						STEEL LOAD PLATE			REACTIONS		MAXIMUM
	L	W	ti	te	T	N	A	B	THICKNESS	DL	LL	TOTAL LOAD
SOUTHBOUND EXTERIOR BEARING	12"	1'-5 3/4"	5/8"	7/16"	3 1/16"	4	1'-1"	1'-6 3/4"	1"	30 k	60 k	90 k
SOUTHBOUND INTERIOR BEARING	12"	1'-5 3/4"	5/8"	7/16"	3 1/16"	4	1'-1"	1'-6 3/4"	1"	33 k	73 k	106 k
NORTHBOUND EXTERIOR BEARING	12"	1'-5 3/4"	5/8"	7/16"	3 1/16"	4	1'-1"	1'-6 3/4"	1"	26 k	56 k	82 k
NORTHBOUND INTERIOR BEARING	12"	1'-5 3/4"	5/8"	7/16"	3 1/16"	4	1'-1"	1'-6 3/4"	1"	29 k	67 k	96 k

ti = THICKNESS OF INTERNAL LAYER
te = THICKNESS OF EXTERNAL LAYER
T = TOTAL THICKNESS OF ELASTOMERIC BEARING

N = NO. OF STEEL LAMINATES
INTERNAL STEEL LAMINATE THICKNESS = 0.0747"
DUROMETER OF ELASTOMER = 50 DUROMETER

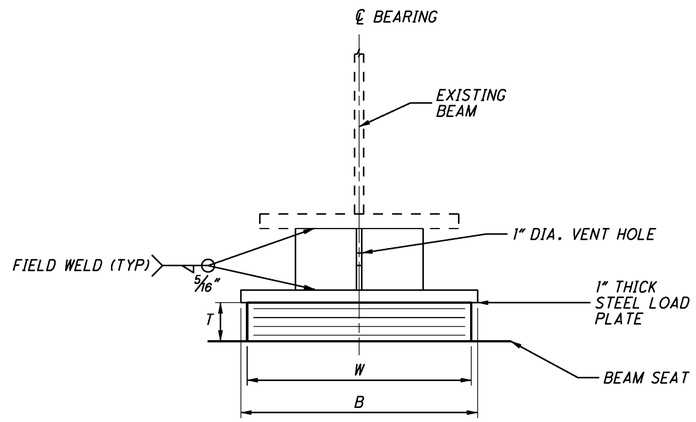

GIRDER CROSS SECTION VIEW

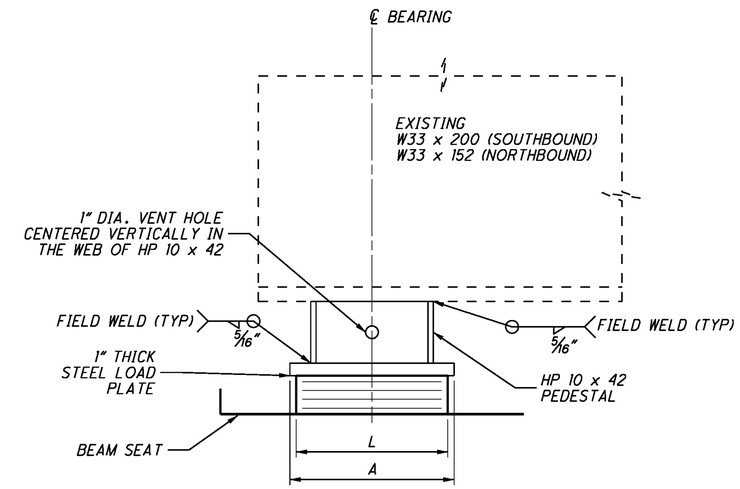

GIRDER ELEVATION VIEW

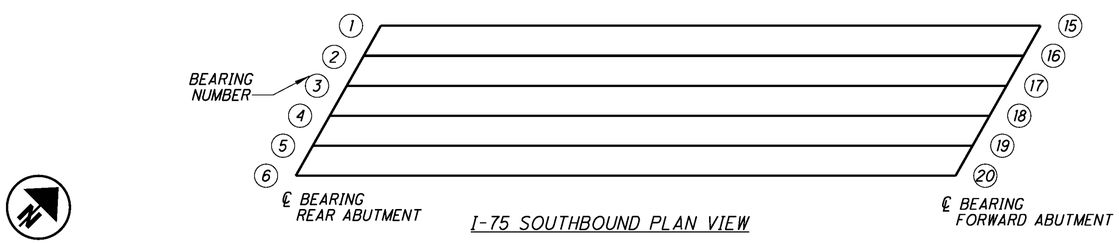

I-75 SOUTHBOUND PLAN VIEW

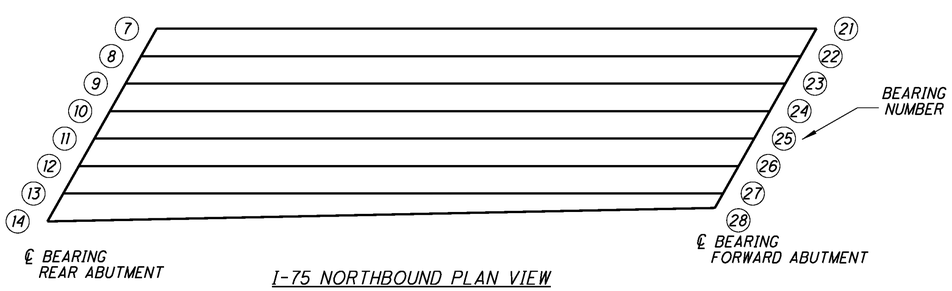

I-75 NORTHBOUND PLAN VIEW

NOTES:

1. ELEVATION SHOTS OF THE EXISTING GIRDERS SHALL BE TAKEN BEFORE WORK BEGINS AND THEN VERIFIED AFTER WORK IS COMPLETED TO ENSURE THAT THE BEAMS HAVE BEEN RESET TO THE CORRECT ELEVATION. THE EXCEPTION TO THIS IS THE BEAMS DIRECTLY ABOVE BEARINGS 7-14, WHICH SHALL BE LOWERED BY 1/4" FROM ITS PREVIOUS ELEVATION. THIS SHALL BE PAID FOR UNDER ITEM 516 -JACKING AND TEMPORARY SUPPORT OF SUPERSTRUCTURE, AS PER PLAN. IF ELEVATIONS DIFFER FROM PREVIOUSLY MEASURED ELEVATIONS, THEN THE CONTRACTOR SHALL FIX THIS PROBLEM AT HIS OWN EXPENSE.

2. THE STEEL GIRDER ENDS SHALL BE CLEANED OF DEBRIS AND DUST. PAINT AND RUST IN THE AREA OF THE BEARING SHALL BE REMOVED BY WAY OF TOOLING, GRINDING OR SAND BLASTING PRIOR TO WELDING. THIS WORK SHALL BE PAID FOR UNDER ITEM 516 - ELASTOMERIC BEARING WITH INTERNAL LAMINATES AND LOAD PLATE (NEOPRENE), AS PER PLAN.

3. SHOP FABRICATE THE LOAD PLATES USING ASTM A709 GRADE 50 STEEL.

4. SHOP MARK HP SECTIONS WITH THE FOLLOWING INFORMATION: BEARING NUMBER & FORWARD STATIONING.

5. CONTROL WELDING SO THAT THE PLATE TEMPERATURE AT THE ELASTOMER BONDED SURFACE DOES NOT EXCEED 300°F AS DETERMINED BY THE USE OF PYROMETRIC STICKS OR OTHER TEMPERATURE MONITORING DEVICES.

6. THE STEEL LOAD PLATE SHALL BE BONDED BY VULCANIZATION TO THE ELASTOMER DURING THE MOLDING PROCESS.

7. THE ELASTOMER SHALL HAVE A HARDNESS OF 50 DURAMETER. THE BEARINGS WERE DESIGNED UNDER DIVISION 1, SECTION 14.6.6 (METHOD A) OF THE AASHTO STANDARD SPECIFICATIONS FOR HIGHWAY BRIDGES.

8. IF BEARING AREA HAS A SLOPE THAT EXCEEDS 1/4" PER FOOT IN ANY DIRECTION, THE CONTRACTOR SHALL REMOVE THE TOP PORTION OF THE BEARING AREA CONCRETE AND USE ITEM 843 - PATCHING CONCRETE STRUCTURE WITH TROWABLE MORTAR, AS PER PLAN TO OBTAIN A LEVEL SURFACE.

9. FILL PATCHING CONSISTS OF FILLING IN THE FOOTPRINT OF THE EXISTING BEARINGS WITH GROUT TO ACHIEVE A BEARING SURFACE THAT IS LEVEL WITH THE REMAINING BEAM SEAT. THIS ITEM IS PAID FOR UNDER ITEM 843 - PATCHING CONCRETE STRUCTURE WITH TROWELABLE MORTAR, AS PER PLAN.

10. REFER TO SHEET 6 OF 45 FOR BEAM JACKING AND CONCRETE PATCHING NOTES.

11. THE UNIT BID PRICE INCLUDES ALL MATERIALS, LABOR, SHOP COATING, TESTING AND INCIDENTALS NECESSARY TO FURNISH AND INSTALL LAMINATED ELASTOMERIC BEARINGS INCLUDING STEEL LOAD PLATES. PAYMENT WILL BE INCLUDED WITH THE APPROPRIATE 516 ITEM.

12. THE STEEL LOAD PLATE AND AREAS ON THE BEAM WHERE PAINT WAS REMOVED FOR WELDING PURPOSES SHALL HAVE TOUCH UP PAINT APPLIED. THIS PAINTING SHALL BE PAID FOR UNDER ITEM 514 - FIELD PAINTING OF DAMAGED STRUCTURAL STEEL, AS PER PLAN.

13. CONTRACTOR SHALL FIELD MEASURE THE EXISTING BEARING HEIGHTS BEFORE ORDERING ANY MATERIALS.

DESIGN AGENCY
MS COMPANIES

DESIGNED	DRAWN	REVIEWED	DATE
SRB	SRB	JDH	12/10/08
CHECKED	REVISED	STRUCTURE FILE NUMBER	
CAH		7501986 & 7502044	

GIRDER BEARING DETAILS

BRIDGE No: SHE-75-0888 L/R
INTERSTATE 75 OVER B&O RAILROAD

D07-BH-FY2009
PID No. 83358

J:\TS\07\07-229 ODOT District 7 GES\80631\structures\7a-7e Combined\SHE-75-0888\Sheets\0888_SD001.dgn 1/8/2009 8:41:20 AM arhayes ODOT_MS_PDF_FULL.plt ODOT_MS_PENTABLE.tbl M-E Compa

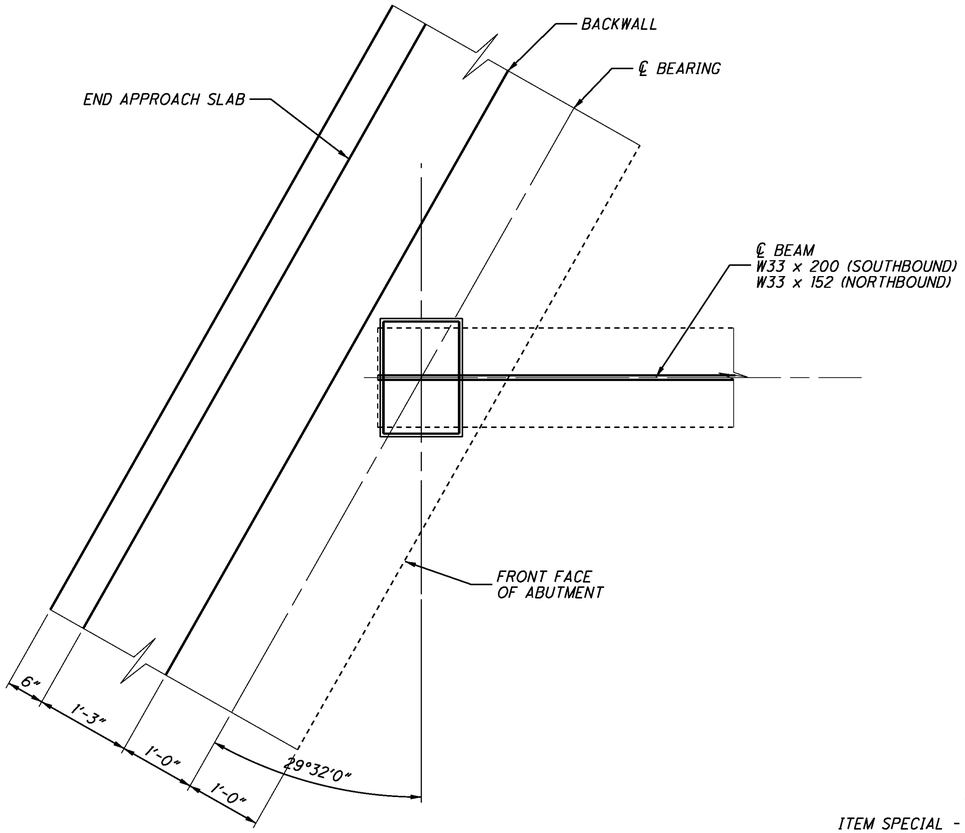

BEARING PLAN VIEW

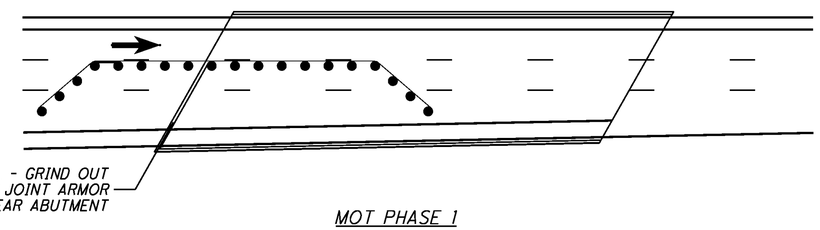

SEE TEM 602-5.8 & OMUTCD FIGURE 6H-37

MOT PHASE 1

NOTES:

1. ALL LANE CLOSURES SHALL TAKE PLACE DURING THE WEEKEND.

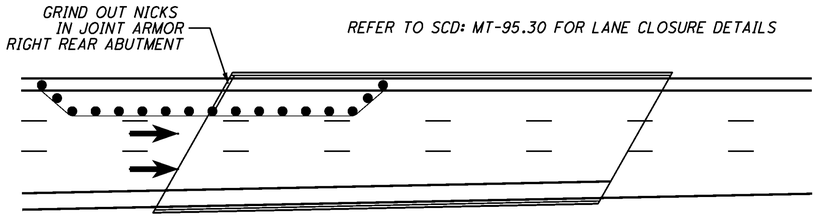

MOT PHASE 2

NOTES:

1. REFER TO SHEET 10 OF 45 FOR MAINTENANCE OF TRAFFIC INFORMATION.

DESIGN AGENCY
MS COMPANIES
8181 Beechcraft Boulevard
Mentor, Ohio 44060
Contact: Ty Griffith
(216) 391-1000
Fax 216-391-1001

DESIGNED	DRAWN	REVIEWED	DATE
SRB	SRB	JDH	12/10/08
CHECKED	REVISED	STRUCTURE FILE NUMBER	
CAH		7501986 & 7502044	

GIRDER BEARING DETAILS
BRIDGE No: SHE-75-0888 L/R
INTERSTATE 75 OVER B&O RAILROAD

D07-BH-FY2009
PID No. 83358

J:\TS\07\07-229 ODOT District 7 GES\80631\structures\7a-7e Combined\SHE-75-0888\Sheets\SD001.dgn 12/15/2008 9:26:52 AM arhayes ODOT_MS_PDF_FULL.plt ODOT_MS_PENTABLE.tbl M-E Companies

J:\TS\07\07-229 ODOT District 7 GES\80631\structures\7a-7e Combined\SHE-75-0888\Sheets\0888LSD001.dgn 12/15/2008 9:26:54 AM arhayes ODOT_MS_PDF_FULL.plt ODOT_MS_PENTABLE.tbl M-E Com

NOTE:
THE CONTRACTOR SHALL GRIND OUT NICKS IN THE JOINT ARMOR OF THE RIGHT BRIDGE. THIS WORK SHALL BE PAID UNDER ITEM 530 - SPECIAL - STRUCTURE, MISC.: GRIND NICKS IN JOINT ARMOR.

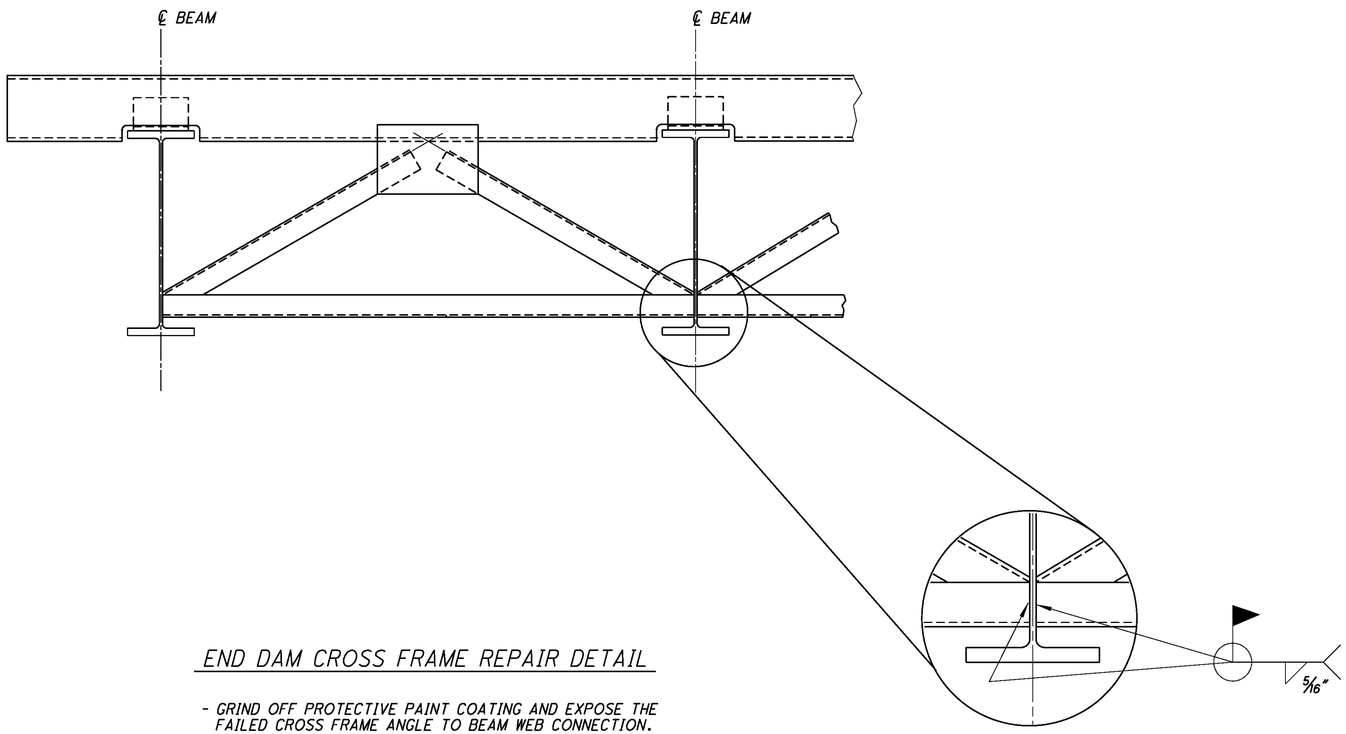

END DAM CROSS FRAME REPAIR DETAIL

- GRIND OFF PROTECTIVE PAINT COATING AND EXPOSE THE FAILED CROSS FRAME ANGLE TO BEAM WEB CONNECTION.
- GRIND OFF EXISTING WELD MATERIAL.
- REATTACH THE ANGLES TO THE BEAM WEB BY WELDING.
- SPOT PAINT THE CONNECTION ONCE THE WELD HAS BEEN APPROVED BY THE ENGINEER. ALL LABOR, MATERIALS AND EQUIPMENT REQUIRED TO COMPLETE THIS TASK SHALL BE PAID FOR UNDER ITEM 514 - FIELD PAINTING OF DAMAGED STRUCTURAL STEEL, AS PER PLAN.
- CONTRACTOR SHALL INSPECT ALL OF THE END DAM CROSS FRAMES BRIDGES AND REPAIR ALL DAMAGED ANGLE TO BEAM WEB CONNECTIONS AS DIRECTED BY THE ENGINEER.
- A QUANTITY OF 12 CROSS FRAMES HAS BEEN PROVIDED FOR THIS WORK. ALERT THE PROJECT ENGINEER SHOULD MORE THAN 12 REPAIR LOCATIONS BE IDENTIFIED. ALL LABOR, MATERIALS AND EQUIPMENT REQUIRED TO COMPLETE THIS TASK SHALL BE PAID FOR UNDER ITEM ITEM 513 - STRUCTURAL STEEL MISC.: STEEL PREPARATION, REPAIR AND NON-DESTRUCTIVE TESTING.

DESIGN AGENCY
MS3 COMPANIES

DESIGNED	DRAWN	REVIEWED	DATE
CAH	CAH	JDH	12/10/08
CHECKED	REVISED	STRUCTURE FILE NUMBER	
SRB		7501986 & 7502044	

END DAM CROSS FRAME REHABILITATION DETAILS
BRIDGE No.: SHE-75-0888 L/R
INTERSTATE 75 OVER THE B&O RAILROAD

D07-BH-FY2009
PID No. 83358

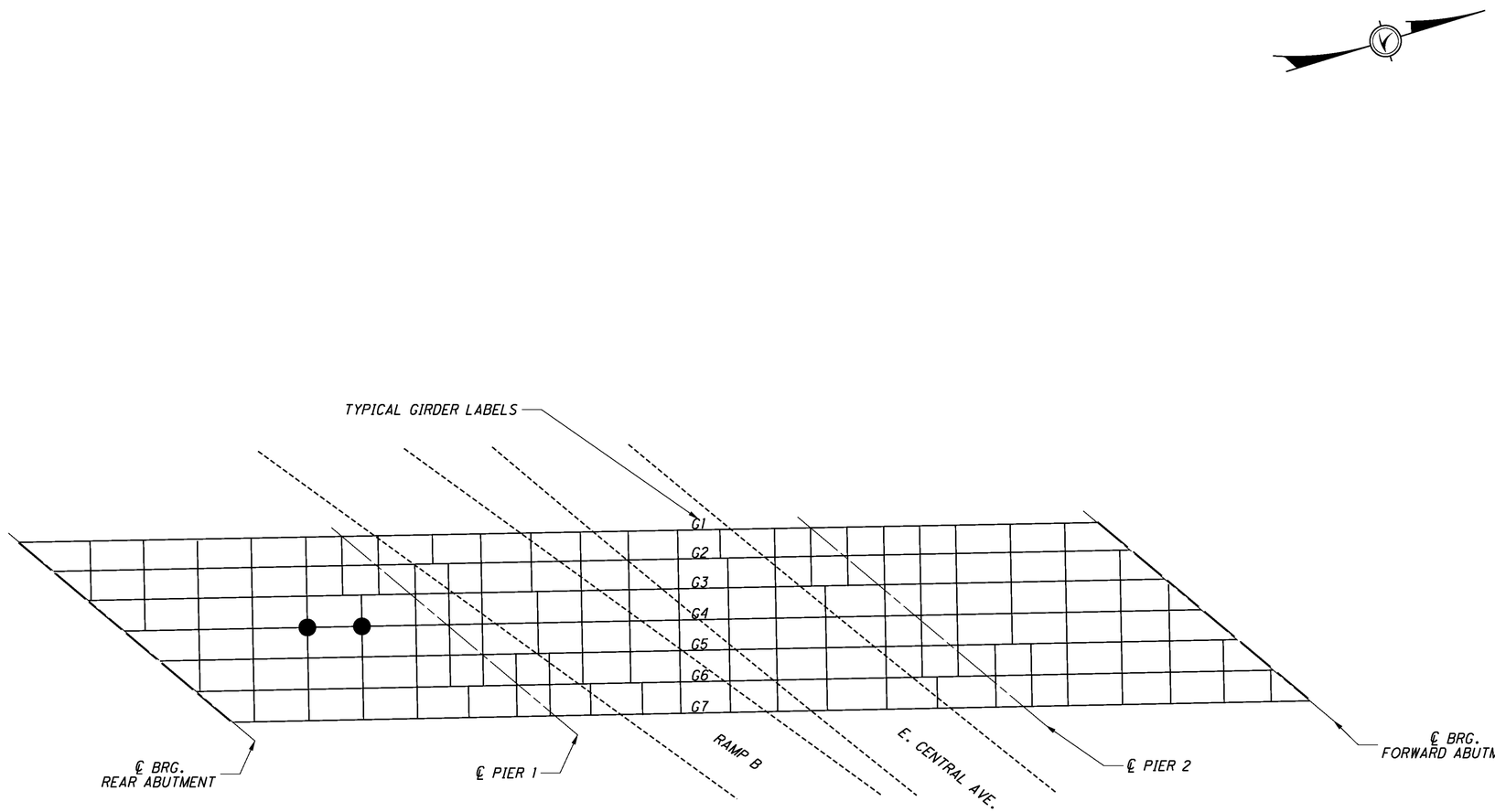

0666R FRAMING PLAN
(FOR INFORMATION ONLY)

LEGEND

● PROBABLE CRACK REPAIR LOCATION THAT MUST BE INSPECTED PER ITEM 513 - STRUCTURAL STEEL, MISC.: STEEL PREPARATION, INSPECTION, AND NDT (SEE SHEET 7 & 8 OF 45)

NOTES

1. SEE SHEET 45 OF 45 FOR CRACK REPAIR DETAILS
2. SEE SHEETS 6 THRU 8 OF 45 FOR GENERAL NOTES
3. FRAMING PLAN NOT DRAWN TO SCALE, FOR GENERAL REFERENCE ONLY

DESIGN AGENCY
MEC COMPANIES
CSB Brookside Boulevard
Westerville, OH 43081
Contact: Ph. 614.818.4900
Fax 614.818.4901

DESIGNED	DRAWN	REVIEWED	DATE
ARH	ARH	DCB	12/10/08
CHECKED	REVISED	STRUCTURE FILE NUMBER	
CAH		5706750	

STRUCTURE REHABILITATION PLAN
BRIDGE NO.: MOT-75-0666R
NORTHBOUND LANES OVER RAMP B AND EAST CENTRAL AVENUE

D07-BH-FY2009
PID No. 83358

1 / 1

31 / 45

J:\TS\07\07-229 ODOT District 7 GES\80631\structures\7a-7e Combined\MOT-75-0666R\75-0666RFP001.dgn 12/15/2008 9:26:56 AM arhayes ODOT_MS_PDF_FULL.plt ODOT_MS_PENTABLE.tbl M-E Compa

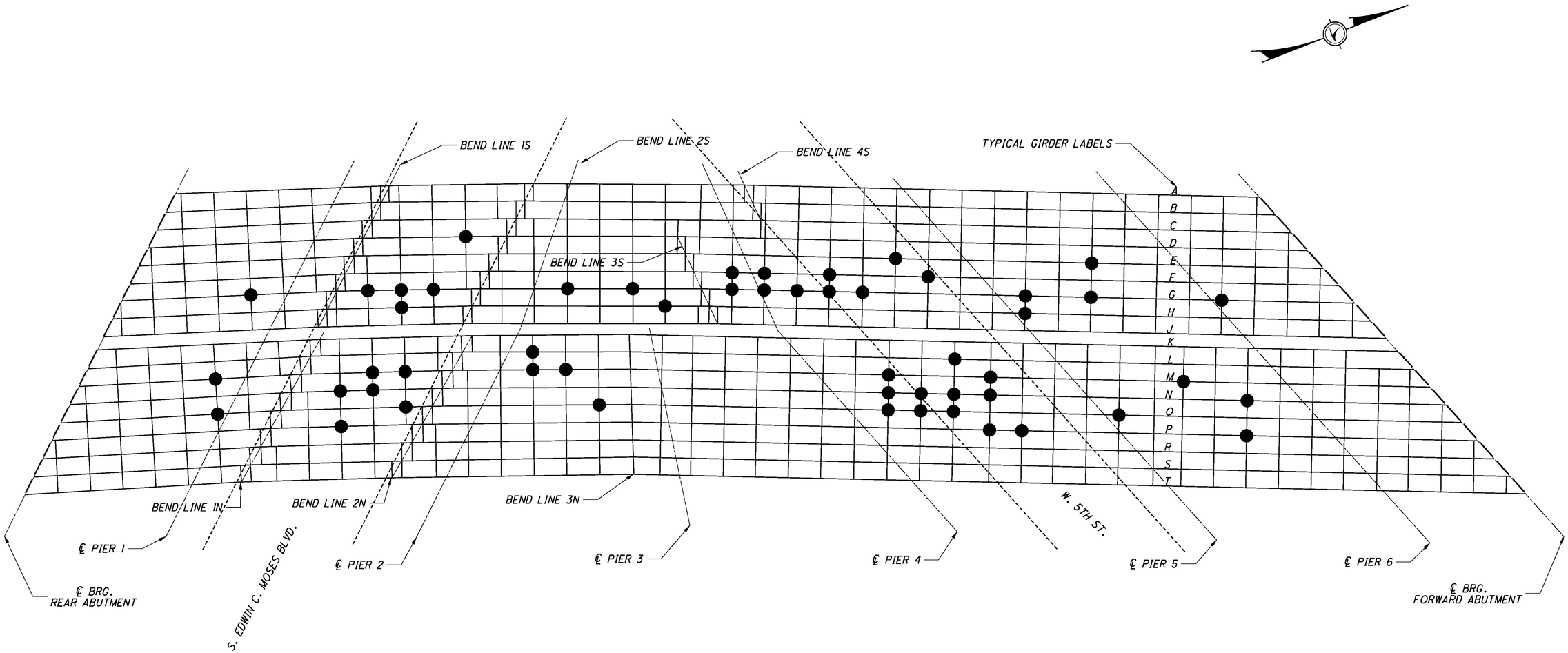

1208 FRAMING PLAN

(FOR INFORMATION ONLY)

LEGEND

● PROBABLE CRACK REPAIR LOCATION THAT MUST BE INSPECTED PER ITEM 513 - STRUCTURAL STEEL, MISC.: STEEL PREPARATION, INSPECTION, AND NDT (SEE SHEET 7 & 8 OF 45)

NOTES

1. SEE SHEET 45 OF 45 FOR CRACK REPAIR DETAILS
2. SEE SHEETS 6 THRU 8 OF 45 FOR GENERAL NOTES
3. FRAMING PLAN NOT DRAWN TO SCALE, FOR GENERAL REFERENCE ONLY

DESIGN AGENCY

MS COMPANIES

DESIGNED	DRAWN	REVIEWED	DATE
ARH	ARH	DCB	12/10/08
CHECKED	REVISED	STRUCTURE FILE NUMBER	
CAH		5707684	

STRUCTURE REHABILITATION PLAN

BRIDGE NO.: MOT-75-1208

OVER S. EDWIN C. MOSES BLVD AND WEST FIFTH STREET

D07-BH-FY2009

PID No. 83358

1 / 1

32 / 45

J:\TS\07\07-229 ODOT District 7 GES\80631\structures\7a-7e Combined\MOT-75-1208\75-1208FP001.dgn 12/15/2008 9:26:58 AM arhayes ODOT_MS_PDF_FULL.plt ODOT_MS_PENTABLE.tbl M-E Companies

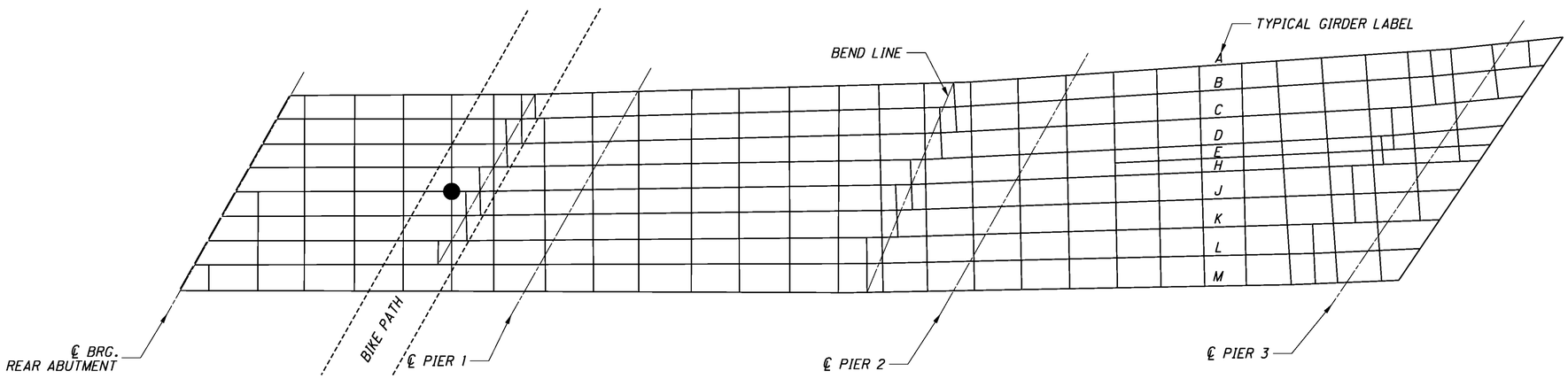

1226L FRAMING PLAN

(FOR INFORMATION ONLY)

LEGEND

● PROBABLE CRACK REPAIR LOCATIONS THAT MUST BE INSPECTED PER ITEM 513 - STRUCTURAL STEEL, MISC.: STEEL PREPARATION, INSPECTION, AND NDT (SEE SHEET 7 AND 8 OF 45)

NOTES

1. SEE SHEET 45 OF 45 FOR CRACK REPAIR DETAILS
2. SEE SHEETS 6 THRU 8 OF 45 FOR GENERAL NOTES
3. FRAMING PLAN NOT DRAWN TO SCALE, FOR GENERAL REFERENCE ONLY

DESIGN AGENCY

MEC COMPANIES

DESIGNED	DRAWN	REVIEWED	DATE
ARH	ARH	DCB	12/10/08
CHECKED	REVISED	STRUCTURE FILE NUMBER	
CAH		5707749	

STRUCTURE REHABILITATION PLAN

BRIDGE NO.: MOT-75-1226L

SOUTHBOUND LANES OVER BIKE PATH

D07-BH-FY2009

PID No. 83358

J:\TS\07\07-229 ODOT District 7 GES\80631\structures\7a-7e Combined\MOT-75-1226R\75-1226FP001.dgn 12/15/2008 9:26:59 AM arhayes ODOT_MS_PDF_FULL.plt ODOT_MS_PENTABLE.tbl M-E Compan

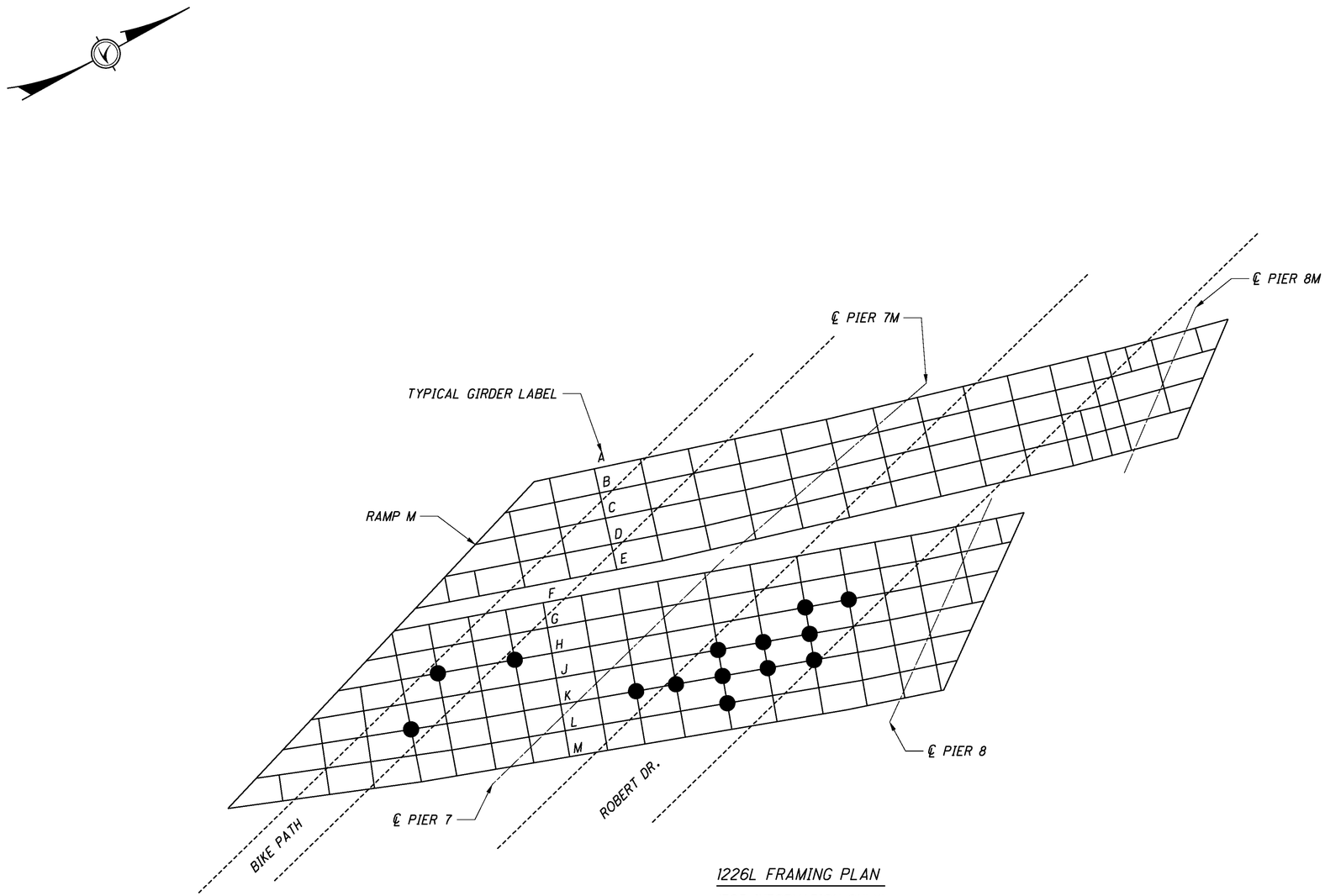

1226L FRAMING PLAN

(FOR INFORMATION ONLY)

LEGEND

● PROBABLE CRACK REPAIR LOCATIONS THAT MUST BE INSPECTED PER ITEM 513 - STRUCTURAL STEEL, MISC.: STEEL PREPARATION, INSPECTION, AND NDT (SEE SHEET 7 AND 8 OF 45)

NOTES

1. SEE SHEET 45 OF 45 FOR CRACK REPAIR DETAILS
2. SEE SHEETS 6 THRU 8 OF 45 FOR GENERAL NOTES
3. FRAMING PLAN NOT DRAWN TO SCALE, FOR GENERAL REFERENCE ONLY

DESIGN AGENCY

MEC COMPANIES

DESIGNED	DRAWN	REVIEWED	DATE
ARH	ARH	DCB	12/10/08
CHECKED	REVISED	STRUCTURE FILE NUMBER	
CAH		5707749	

STRUCTURE REHABILITATION PLAN

BRIDGE NO.: MOT-75-1226L

SOUTHBOUND LANES OVER BIKE PATH AND ROBERT DR.

D07-BH-FY2009

PID No. 83358

J:\TS\07\07-229 ODOT District 7 GES\80631\structures\7a-7e Combined\MOT-75-1226R\75-1226FP001.dgn 12/15/2008 9:26:59 AM arhayes ODOT_MS_PDF_FULL.plt ODOT_MS_PENTABLE.tbl M-E Compan

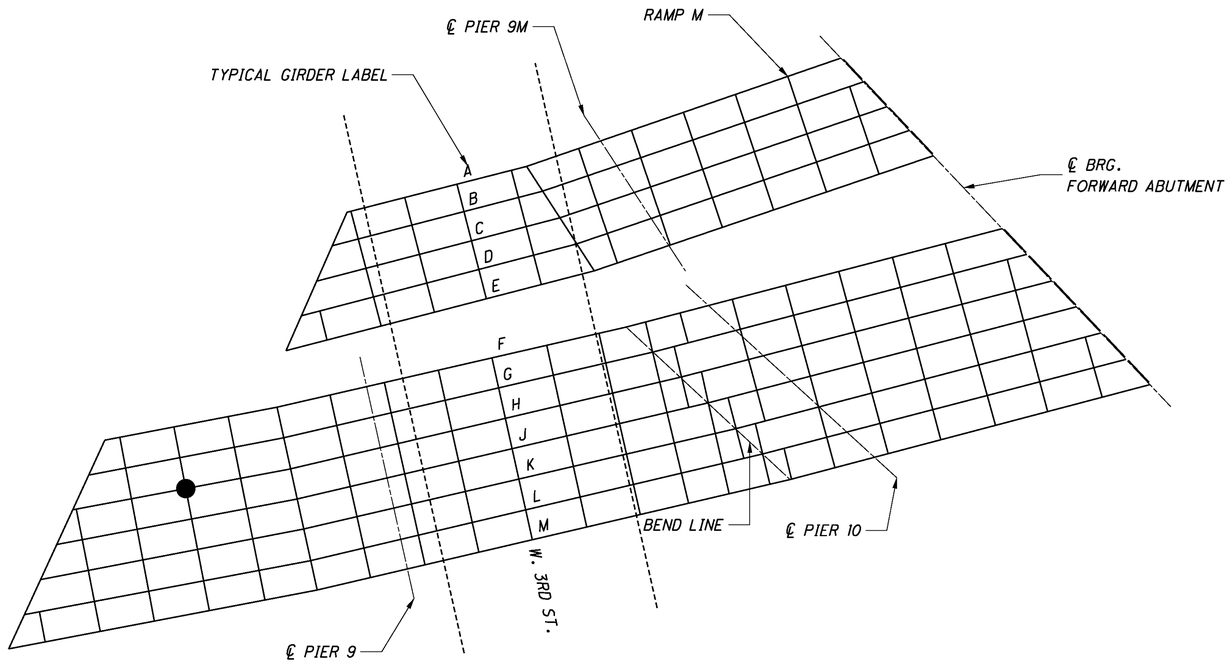

1226L FRAMING PLAN

(FOR INFORMATION ONLY)

LEGEND

● PROBABLE CRACK REPAIR LOCATIONS THAT MUST BE INSPECTED PER ITEM 513 - STRUCTURAL STEEL, MISC.: STEEL PREPARATION, INSPECTION, AND NDT (SEE SHEET 7 AND 8 OF 45)

NOTES

1. SEE SHEET 45 OF 45 FOR CRACK REPAIR DETAILS
2. SEE SHEETS 6 THRU 8 OF 45 FOR GENERAL NOTES
3. FRAMING PLAN NOT DRAWN TO SCALE, FOR GENERAL REFERENCE ONLY

DESIGN AGENCY

MEC COMPANIES

DESIGNED	DRAWN	REVIEWED	DATE
ARH	ARH	DCB	12/10/08
CHECKED	REVISED	STRUCTURE FILE NUMBER	
CAH		5707749	

STRUCTURE REHABILITATION PLAN

BRIDGE NO.: MOT-75-1226L

SOUTHBOUND LANES OVER WEST THIRD STREET

D07-BH-FY2009

PID No. 83358

J:\TS\07\07-229 ODOT District 7 GES\80631\structures\7a-7e Combined\MOT-75-1226R\75-1226FP001.dgn 12/15/2008 9:27:00 AM arhayes ODOT_MS_PDF_FULL.plt ODOT_MS_PENTABLE.tbl M-E Compan

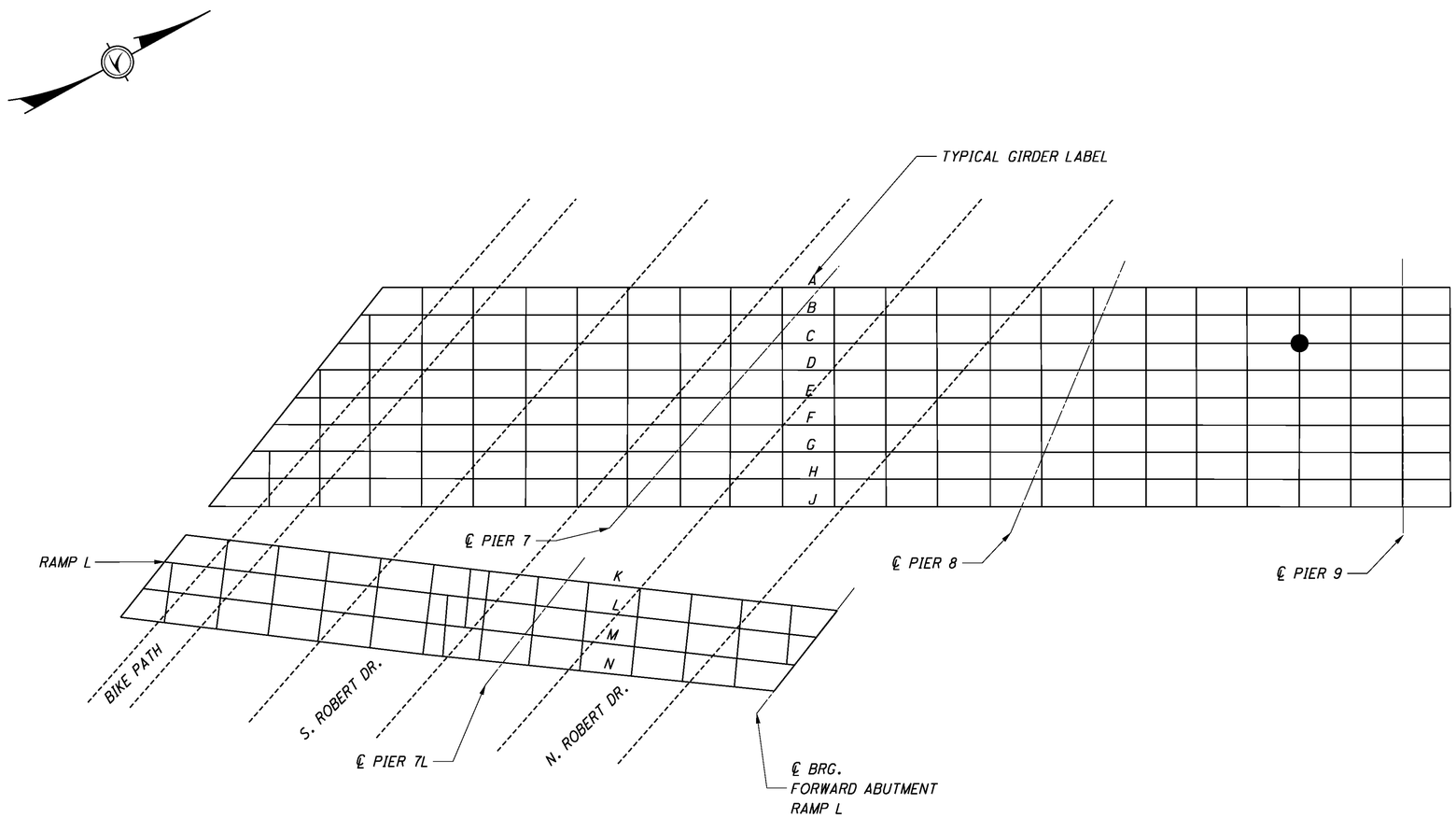

1226R FRAMING PLAN

(FOR INFORMATION ONLY)

LEGEND

● PROBABLE CRACK REPAIR LOCATIONS THAT MUST BE INSPECTED PER ITEM 513 - STRUCTURAL STEEL, MISC.: STEEL PREPARATION, INSPECTION, AND NDT (SEE SHEET 7 AND 8 OF 45)

NOTES

1. SEE SHEET 45 OF 45 FOR CRACK REPAIR DETAILS
2. SEE SHEETS 6 THRU 8 OF 45 FOR GENERAL NOTES
3. FRAMING PLAN NOT DRAWN TO SCALE, FOR GENERAL REFERENCE ONLY

DESIGN AGENCY
MEC COMPANIES

DESIGNED	DRAWN	REVIEWED	DATE
ARH	ARH	DCB	12/10/08
CHECKED	REVISED	STRUCTURE FILE NUMBER	
CAH		5707773	

STRUCTURE REHABILITATION PLAN

BRIDGE NO.: MOT-75-1226R

NORTHBOUND LANES OVER BIKE PATH, SOUTH ROBERT DR., AND NORTH ROBERT DR.

D07-BH-FY2009

PID No. 83358

1 / 2

36 / 45

J:\TS\07\07-229 ODOT District 7 GES\80631\structures\7a-7e Combined\MOT-75-1226R\75-1226FP001.dgn 12/15/2008 9:27:00 AM arhayes ODOT_MS_PDF_FULL.plt ODOT_MS_PENTABLE.tbl M-E Compan

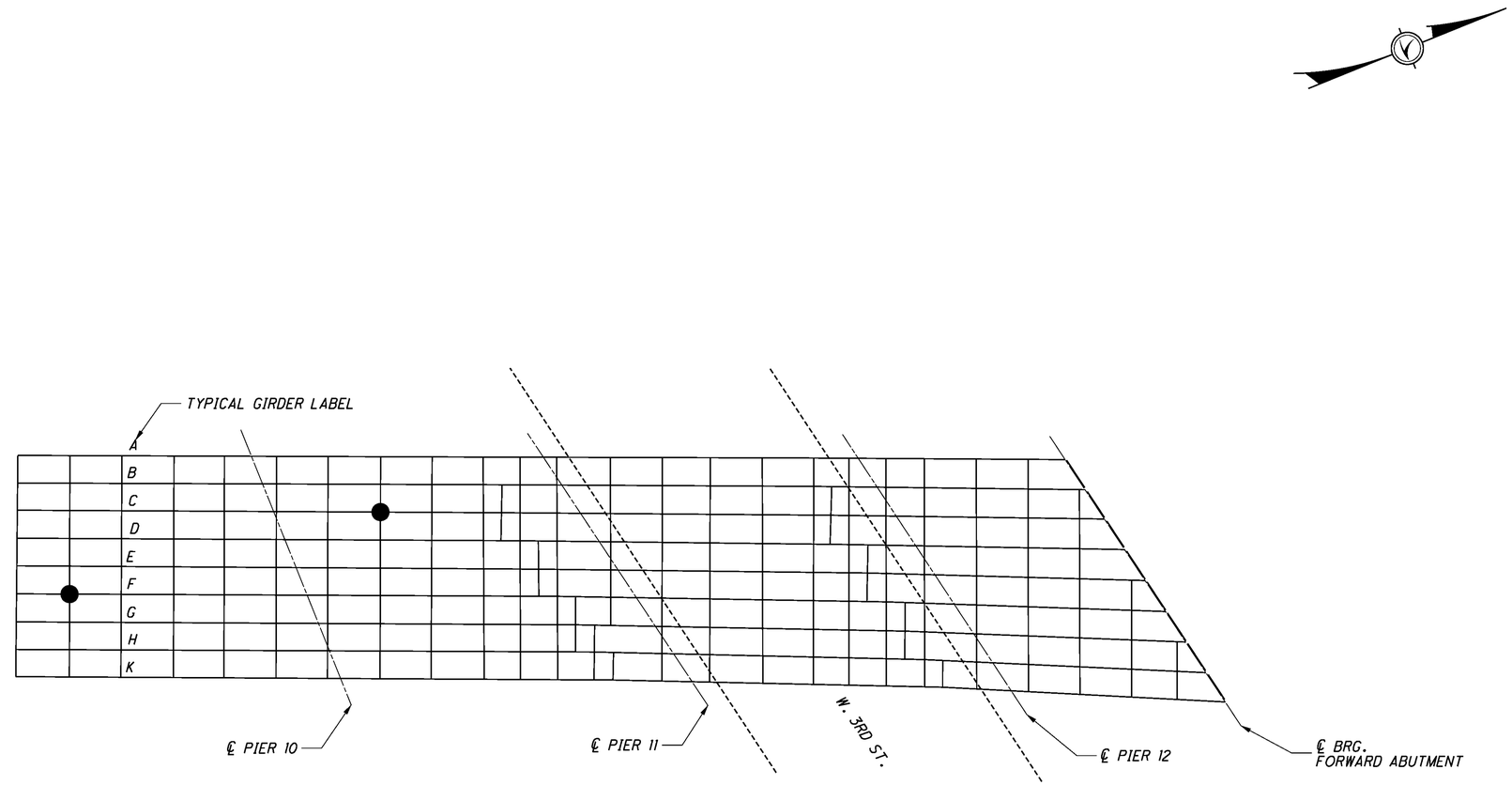

1226R FRAMING PLAN

(FOR INFORMATION ONLY)

LEGEND

● PROBABLE CRACK REPAIR LOCATIONS THAT MUST BE INSPECTED PER ITEM 513 - STRUCTURAL STEEL, MISC.: STEEL PREPARATION, INSPECTION, AND NDT (SEE SHEET 7 AND 8 OF 45)

NOTES

1. SEE SHEET 45 OF 45 FOR CRACK REPAIR DETAILS
2. SEE SHEETS 6 THRU 8 OF 45 FOR GENERAL NOTES
3. FRAMING PLAN NOT DRAWN TO SCALE, FOR GENERAL REFERENCE ONLY

DESIGN AGENCY
MEC COMPANIES

DESIGNED	DRAWN	REVIEWED	DATE
ARH	ARH	DCB	12/10/08
CHECKED	REVISED	STRUCTURE FILE NUMBER	
CAH		5707773	

STRUCTURE REHABILITATION PLAN
BRIDGE NO.: MOT-75-1226R
NORTHBOUND LANES OVER WEST THIRD STREET

D07-BH-FY2009
PID No. 83358

2/2

37/45

J:\TS\07\07-229 ODOT District 7 GES\80631\structures\7a-7e Combined\MOT-75-1226R\75-1226FP001.dgn 12/15/2008 9:27:01 AM arhayes ODOT_MS_PDF_FULL.plt ODOT_MS_PENTABLE.tbl M-E Compan

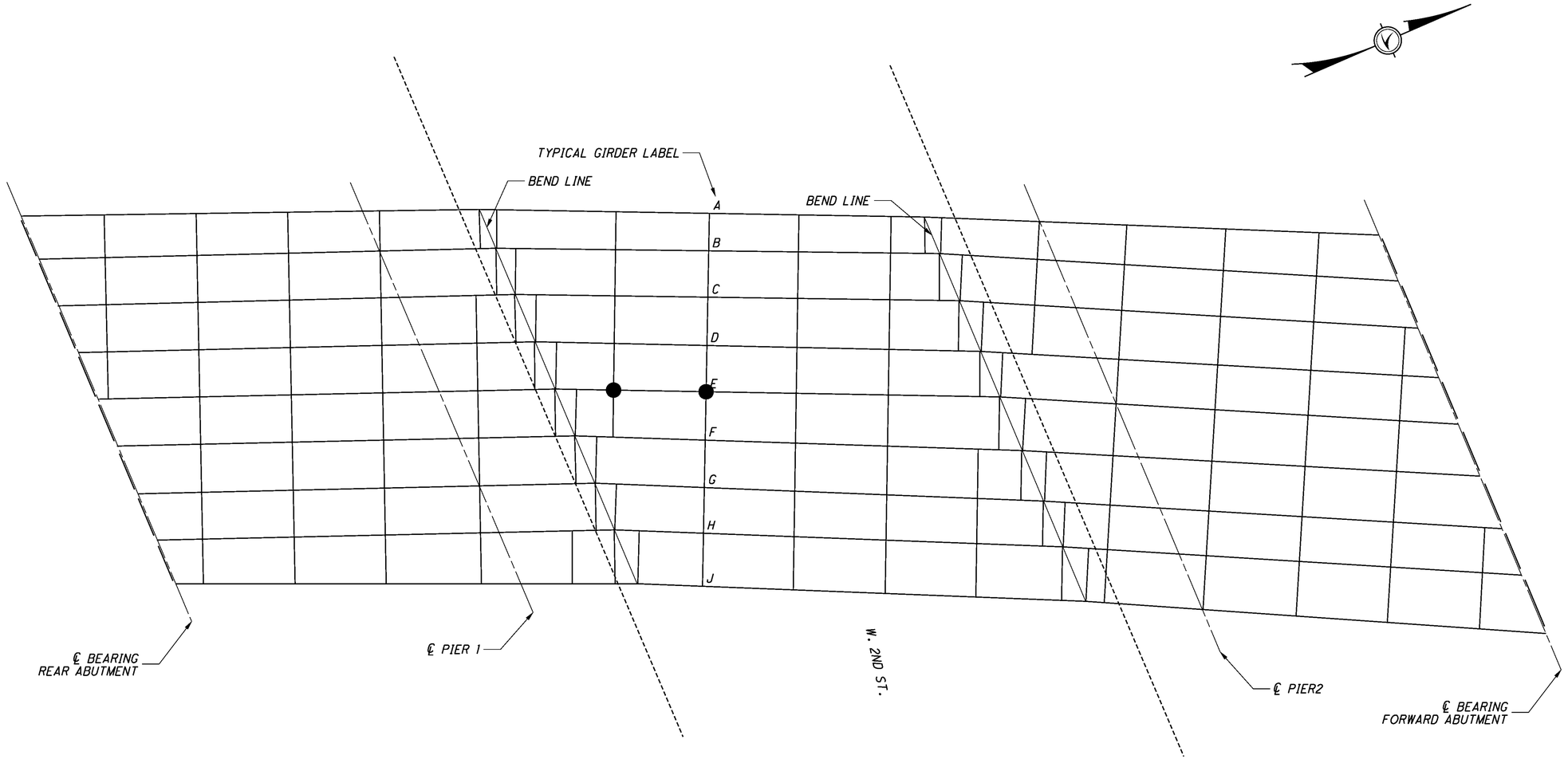

1261L FRAMING PLAN
(FOR INFORMATION ONLY)

LEGEND

● PROBABLE CRACK REPAIR LOCATIONS THAT MUST BE INSPECTED PER ITEM 513 - STRUCTURAL STEEL, MISC.: STEEL PREPARATION, INSPECTION, AND NDT (SEE SHEET 7 AND 8 OF 45)

NOTES

1. SEE SHEET 45 OF 45 FOR CRACK REPAIR DETAILS
2. SEE SHEETS 6 THRU 8 OF 45 FOR GENERAL NOTES
3. FRAMING PLAN NOT DRAWN TO SCALE, FOR GENERAL REFERENCE ONLY

DESIGN AGENCY
MEC COMPANIES
CSB Brookside Boulevard
Westerville, OH 43081
Contact: Ph. 614.818.4
614-888-8500 ext. 357
Fax 888-8501

DESIGNED	DRAWN	REVIEWED	DATE
ARH	SRB	DCB	12/10/08
CHECKED	REVISED	STRUCTURE FILE NUMBER	
CAH		5701862	

STRUCTURE REHABILITATION PLAN
BRIDGE No.: MOT-75-1261L
SOUTHBOUND LANES OVER WEST SECOND STREET

D07-BH-FY2009
PID No. 83358

1 / 1

38 / 45

J:\TS\07\07-229 ODOT District 7 GES\80631\structures\7a-7e Combined\MOT-75-1261L&R\75-1261FP001.dgn 12/15/2008 9:27:02 AM arhayes ODOT_MS_PDF_FULL.plt ODOT_MS_PENTABLE.tbl M-E Comp

LEGEND

● PROBABLE CRACK REPAIR LOCATIONS THAT MUST BE INSPECTED PER ITEM 513 - STRUCTURAL STEEL, MISC.: STEEL PREPARATION, INSPECTION, AND NDT (SEE SHEET 7 AND 8 OF 45)

NOTES

1. SEE SHEET 45 OF 45 FOR CRACK REPAIR DETAILS
2. SEE SHEETS 6 THRU 8 OF 45 FOR GENERAL NOTES
3. FRAMING PLAN NOT DRAWN TO SCALE, FOR GENERAL REFERENCE ONLY

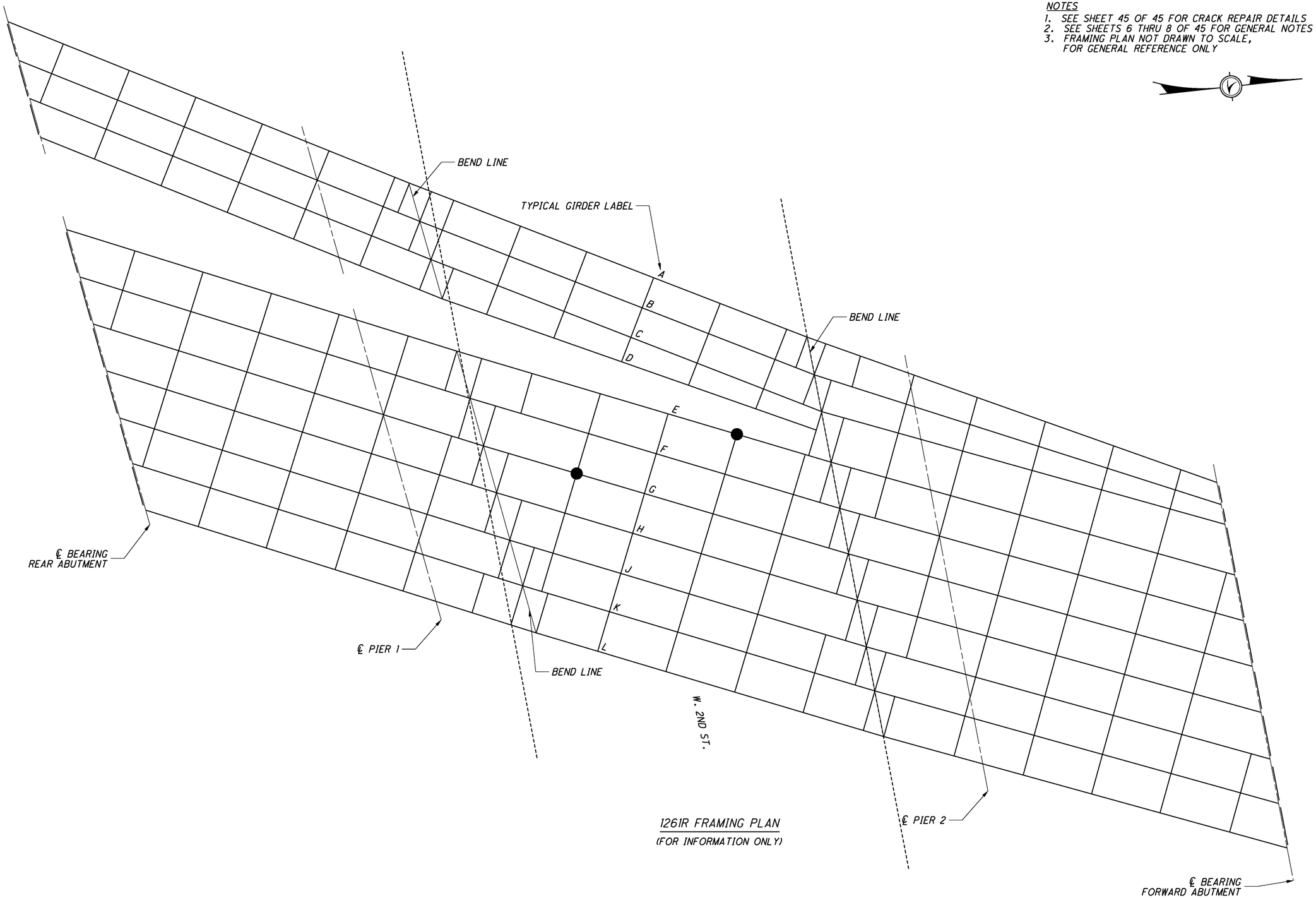

1261R FRAMING PLAN
(FOR INFORMATION ONLY)

DESIGN AGENCY
MEC COMPANIES
CSB Brookside Boulevard
Westerville, OH 43081
Contact Us: 1.800.733.2
614-888-4800 ext. 363.2
Fax 888-4801

DESIGNED	DRAWN	REVIEWED	DATE
ARH	SRB	DCB	12/10/08
CHECKED	REVISED	STRUCTURE FILE NUMBER	
CAH		5707897	

STRUCTURE REHABILITATION PLAN
BRIDGE No.: MOT-75-1261R
NORTHBOUND LANES OVER WEST SECOND STREET

D07-BH-FY2009
PID No. 83358

1/1

39/45

J:\TS\07\07-229 ODOT District 7 GES\80631\structures\7a-7e Combined\MOT-75-1261L&R\75-1261FP001.dgn 12/15/2008 9:27:02 AM arhayes ODOT_MS_PDF_FULL.plt ODOT_MS_PENTABLE.tbl M-E Comp

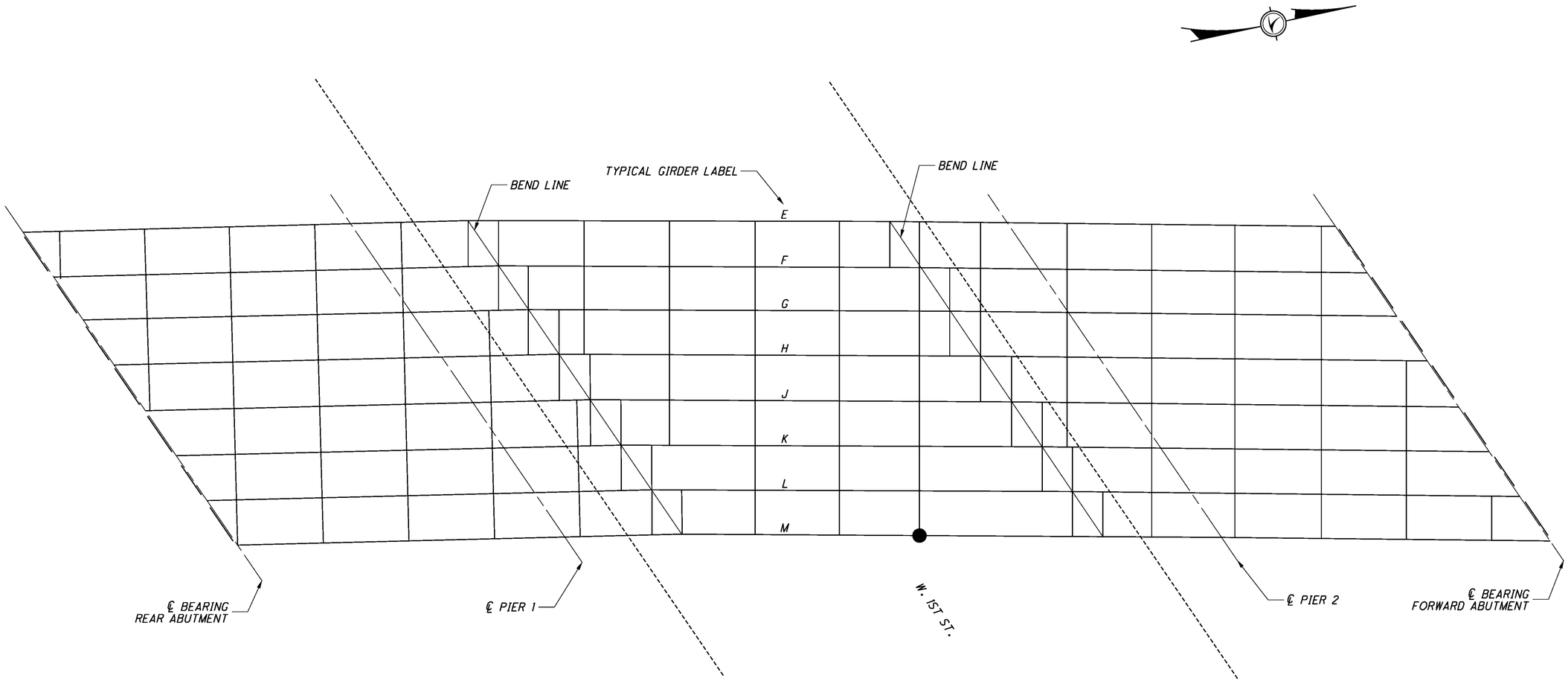

1271L FRAMING PLAN
(FOR INFORMATION ONLY)

LEGEND

● PROBABLE CRACK REPAIR LOCATIONS THAT MUST BE INSPECTED PER ITEM 513 - STRUCTURAL STEEL, MISC.: STEEL PREPARATION, INSPECTION, AND NDT (SEE SHEET 7 AND 8 OF 45)

NOTES

1. SEE SHEET 45 OF 45 FOR CRACK REPAIR DETAILS
2. SEE SHEETS 6 THRU 8 OF 45 FOR GENERAL NOTES
3. FRAMING PLAN NOT DRAWN TO SCALE, FOR GENERAL REFERENCE ONLY

DESIGN AGENCY
MEC COMPANIES
CSB Brookside Boulevard
Westerville, OH 43081
Contact: Ph. 510.1.5
614-888-8800 ext. 33
Fax 888-8801

DESIGNED	DRAWN	REVIEWED	DATE
ARH	SRB	DCB	12/10/08
CHECKED	REVISED	STRUCTURE FILE NUMBER	
CAH		5707927	

STRUCTURE REHABILITATION PLAN
BRIDGE No.: MOT-75-1271L
SOUTHBOUND LANES OVER WEST FIRST STREET

D07-BH-FY2009
PID No. 83358

1/1

40/45

J:\TS\07\07-229 ODOT District 7 GES\80631\structures\7a-7e Combined\MOT-75-1271L,R & D\75-1271FP001.dgn 12/15/2008 9:27:04 AM arhayes ODOT_MS_PDF_FULL.plt ODOT_MS_PENTABLE.tbl M-E C

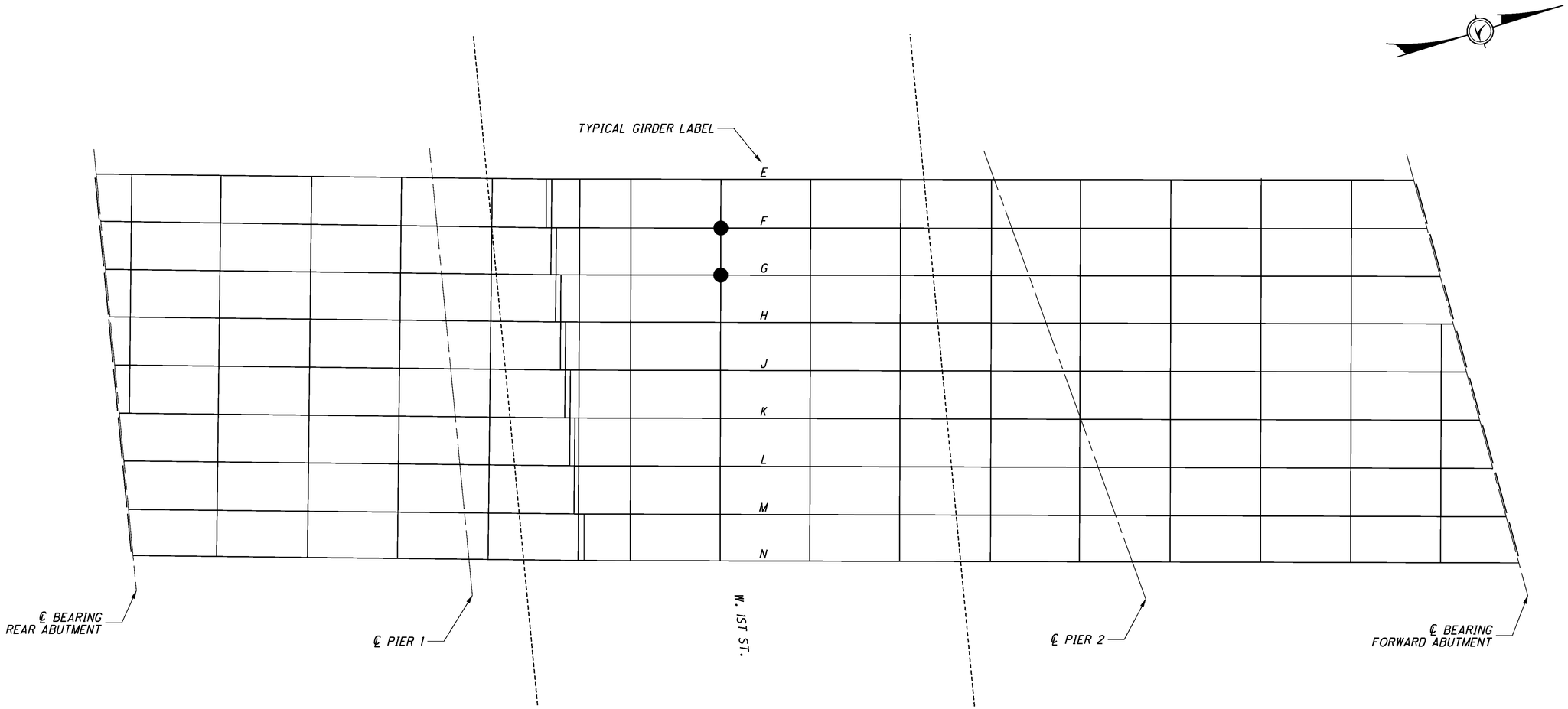

1271R FRAMING PLAN

(FOR INFORMATION ONLY)

LEGEND

● *PROBABLE CRACK REPAIR LOCATIONS THAT MUST BE INSPECTED PER ITEM 513 - STRUCTURAL STEEL, MISC.: STEEL PREPARATION, INSPECTION, AND NDT (SEE SHEET 7 AND 8 OF 45)*

NOTES

1. *SEE SHEET 45 OF 45 FOR CRACK REPAIR DETAILS*
2. *SEE SHEETS 6 THRU 8 OF 45 FOR GENERAL NOTES*
3. *FRAMING PLAN NOT DRAWN TO SCALE, FOR GENERAL REFERENCE ONLY*

DESIGN AGENCY

MS COMPANIES

DESIGNED	DRAWN	REVIEWED	DATE
ARH	DCB	DCB	12/10/08
CHECKED	REVISED	STRUCTURE FILE NUMBER	
CAH		5707897	

STRUCTURE REHABILITATION PLAN

BRIDGE No.: MOT-75-1271R

NORTHBOUND LANES OVER WEST FIRST STREET

D07-BH-FY2009

PID No. 83358

J:\TS\07\07-229 ODOT District 7 GES\80631\structures\7a-7e Combined\MOT-75-1271L,R & D\75-1271FP001.dgn 12/15/2008 9:27:04 AM arhayes ODOT_MS_PDF_FULL.plt ODOT_MS_PENTABLE.tbl M-E C

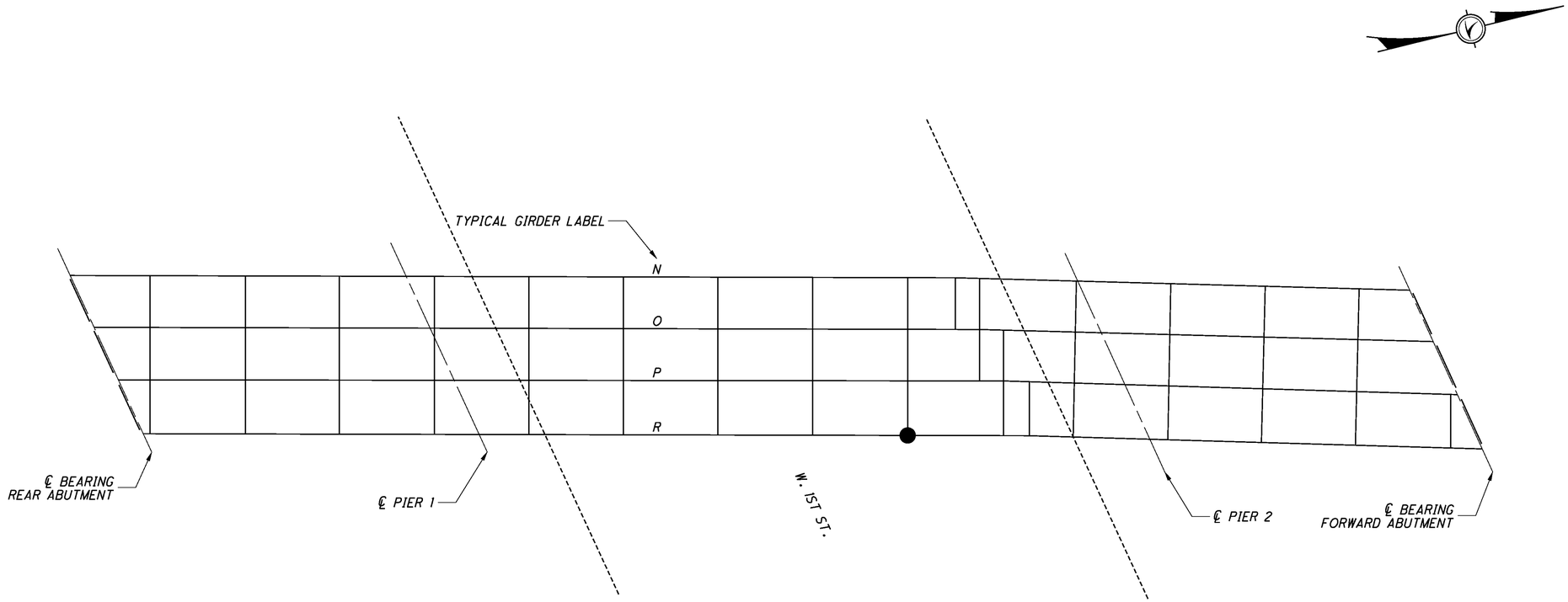

1271D FRAMING PLAN

(FOR INFORMATION ONLY)

LEGEND

● PROBABLE CRACK REPAIR LOCATIONS THAT MUST BE INSPECTED PER ITEM 513 - STRUCTURAL STEEL, MISC.: STEEL PREPARATION, INSPECTION, AND NDT (SEE SHEET 7 AND 8 OF 45)

NOTES

1. SEE SHEET 45 OF 45 FOR CRACK REPAIR DETAILS
2. SEE SHEETS 6 THRU 8 OF 45 FOR GENERAL NOTES
3. FRAMING PLAN NOT DRAWN TO SCALE, FOR GENERAL REFERENCE ONLY

DESIGN AGENCY

MEC COMPANIES

DESIGNED	DRAWN	REVIEWED	DATE
ARH	SRB	DCB	12/10/08
CHECKED	REVISED	STRUCTURE FILE NUMBER	
CAH		5707943	

STRUCTURE REHABILITATION PLAN

BRIDGE No.: MOT-75-1271D

SOUTHBOUND LANES OVER WEST FIRST STREET

D07-BH-FY2009

PID No. 83358

J:\TS\07\07-229 ODOT District 7 GES\80631\structures\7a-7e Combined\MOT-75-1271L,R & D\75-1271FP001.dgn 12/15/2008 9:27:04 AM arhayes ODOT_MS_PDF_FULL.plt ODOT_MS_PENTABLE.tbl M-E C

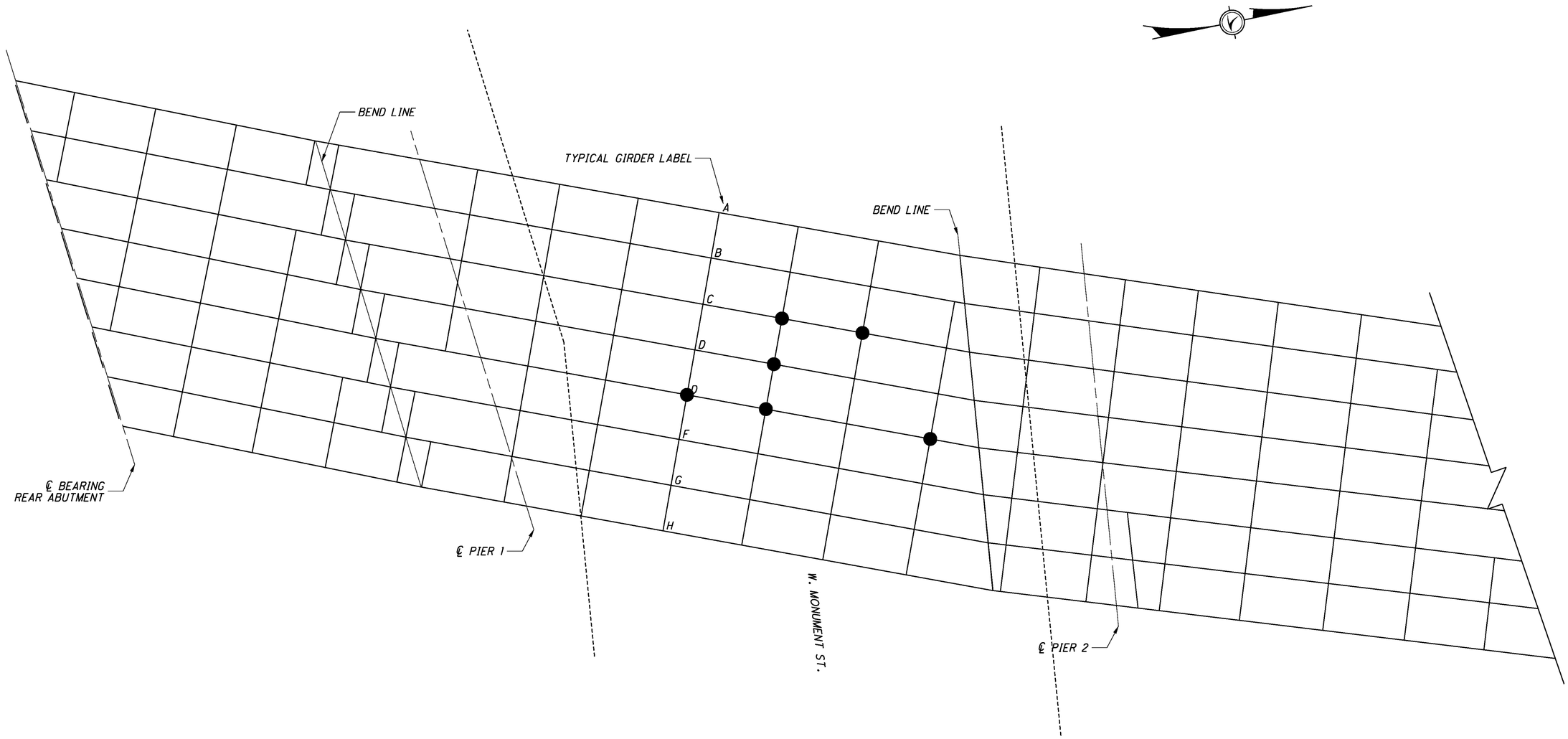

1281L FRAMING PLAN

(FOR INFORMATION ONLY)

LEGEND

● PROBABLE CRACK REPAIR LOCATIONS THAT MUST BE INSPECTED PER ITEM 513 - STRUCTURAL STEEL, MISC.: STEEL PREPARATION, INSPECTION, AND NDT (SEE SHEET 7 AND 8 OF 45)

NOTES

1. SEE SHEET 45 OF 45 FOR CRACK REPAIR DETAILS
2. SEE SHEETS 6 THRU 8 OF 45 FOR GENERAL NOTES
3. FRAMING PLAN NOT DRAWN TO SCALE, FOR GENERAL REFERENCE ONLY

DESIGN AGENCY

MS COMPANIES

DESIGNED	DRAWN	REVIEWED	DATE
ARH	SRB	DCB	12/10/08
CHECKED	REVISED	STRUCTURE FILE NUMBER	
CAH		5708133	

STRUCTURE REHABILITATION PLAN

BRIDGE No.: MOT-75-1281L

EXPRESSWAY OVER GREAT MIAMI RIVER AND WEST MONUMENT STREET

D07-BH-FY2009

PID No. 83358

1 / 1

43 / 45

J:\TS\07\07-229 ODOT District 7 CES\80631\structures\7a-7e Combined\MOT-75-1281L&R\75-1281FP001.dgn 12/15/2008 9:27:06 AM arhayes ODOT_MS_PDF_FULL.plt ODOT_MS_PENTABLE.tbl M-E Compa

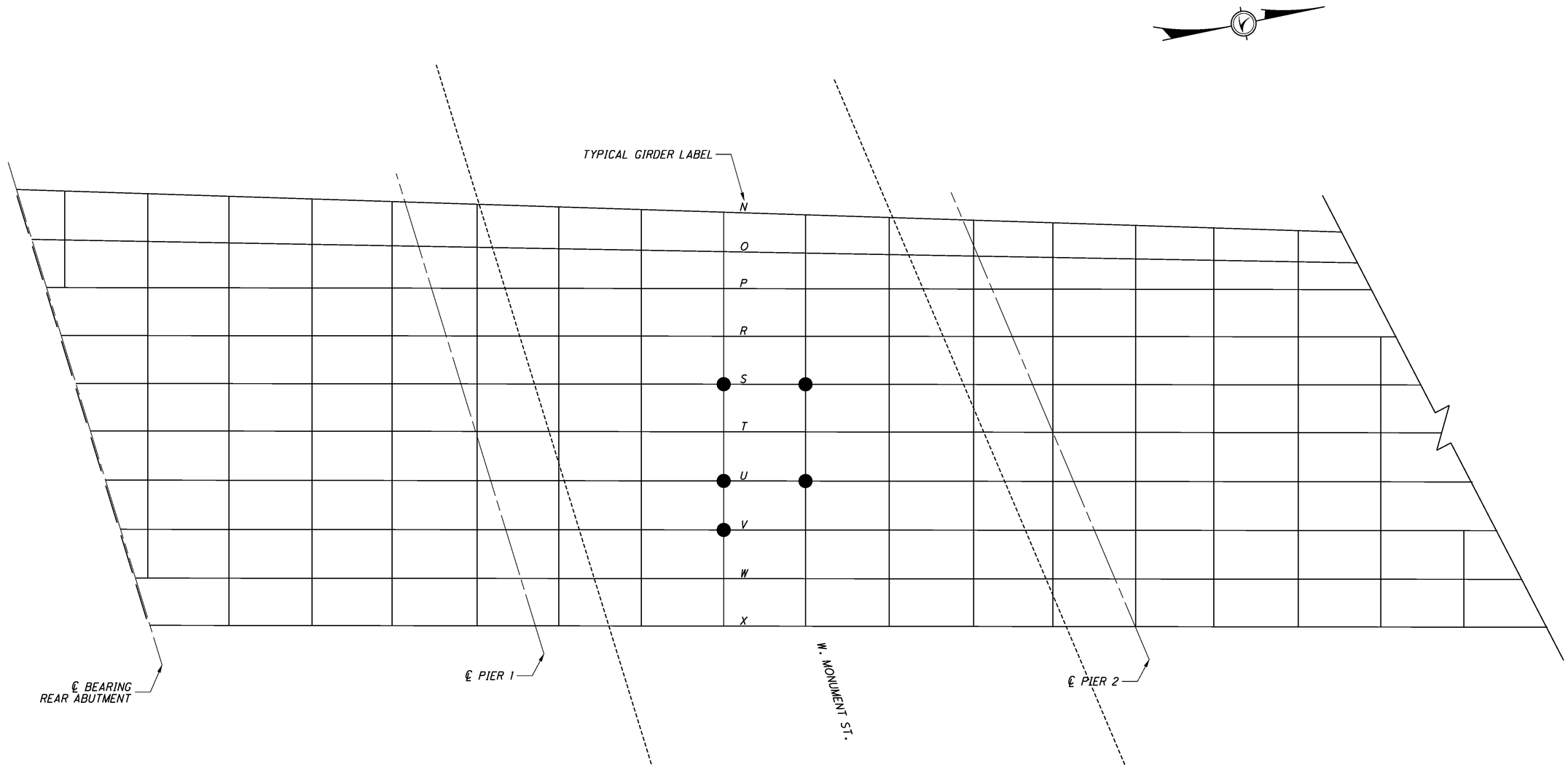

1281R FRAMING PLAN

(FOR INFORMATION ONLY)

LEGEND

● PROBABLE CRACK REPAIR LOCATIONS THAT MUST BE INSPECTED PER ITEM 513 - STRUCTURAL STEEL, MISC.: STEEL PREPARATION, INSPECTION, AND NDT (SEE SHEET 7 AND 8 OF 45)

NOTES

1. SEE SHEET 45 OF 45 FOR CRACK REPAIR DETAILS
2. SEE SHEETS 6 THRU 8 OF 45 FOR GENERAL NOTES
3. FRAMING PLAN NOT DRAWN TO SCALE, FOR GENERAL REFERENCE ONLY

DESIGN AGENCY

MS COMPANIES

DESIGNED	DRAWN	REVIEWED	DATE
ARH	SRB	DCB	12/10/08
CHECKED	REVISED	STRUCTURE FILE NUMBER	
CAH		5708168	

STRUCTURE REHABILITATION PLAN

BRIDGE No.: MOT-75-1281R

EXPRESSWAY OVER GREAT MIAMI RIVER AND WEST MONUMENT STREET

D07-BH-FY2009

PID No. 83358

1 / 1

44 / 45

J:\TS\07\07-229 ODOT District 7 GES\80631\structures\7a-7e Combined\MOT-75-1281L&R\75-1281FP001.dgn 12/15/2008 9:27:07 AM arhayes ODOT_MS_PDF_FULL.plt ODOT_MS_PENTABLE.tbl M-E Compa

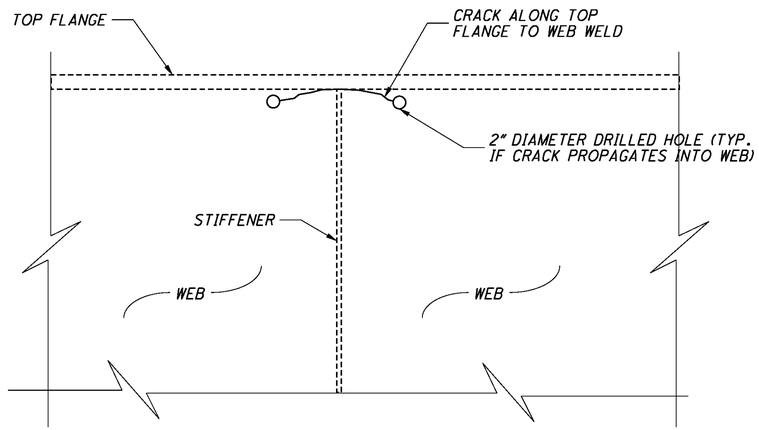

FLANGE TO WEB WELD REPAIR DETAIL

TOP FLANGE SHOWN, BOTTOM FLANGE DETAILS SIMILAR

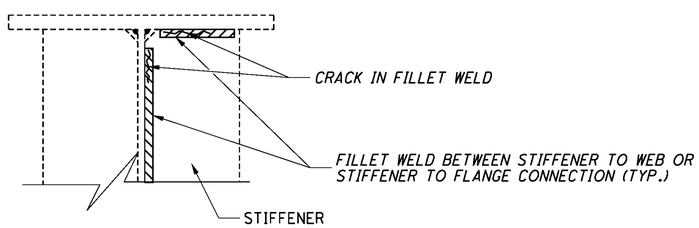

WEB / FLANGE TO STIFFENER REPAIR DETAIL

TOP FLANGE SHOWN, BOTTOM FLANGE DETAILS SIMILAR

REPAIR PROCEDURE

1. GRIND OFF PAINT IN THE AREA OF THE CRACK.
2. PERFORM NON-DESTRUCTIVE TESTING TO DETERMINE THE EXTENT OF THE CRACK.
3. IF CRACK HAS PROPAGATED INTO THE WEB, DRILL 2" DIAMETER HOLES AT CRACK ENDS.
4. GRIND OFF THE CRACKED WELD AREA.
5. REWELD THE REMOVED WELD AREA.
6. WELD ALONG THE ENTIRE LENGTH OF THE CRACK IN THE BASE METAL ON BOTH SIDES OF THE WEB (AS APPLICABLE).
7. PERFORM NON-DESTRUCTIVE TESTING TO CONFIRM AN ACCEPTABLE WELD.
8. REPAINT THE AFFECTED AREA WITH A THREE COAT PAINT SYSTEM THAT CONFORMS TO CMS 708.02 PAID FOR UNDER ITEM 514 - FIELD PAINTING OF DAMAGED STRUCTUTAL STEEL, AS PER PLAN.

NOTE:
REPAIR PROCEDURE STEPS 1 AND 2 ARE PAID UNDER ITEM 513 - STRUCTURAL STEEL, MISC.: STEEL PREPARATION, INSPECTION, AND NDT.
STEPS 3 THRU 7 ARE PAID FOR UNDER ITEM 513 - STRUCTURAL STEEL, MISC.: CRACK REPAIR.

DESIGN AGENCY
MS COMPANIES
CSR Engineering Technologies
Corporate Headquarters
Cincinnati, OH 45241
513-563-1000 Fax 513-563-4001

DESIGNED	DRAWN	REVIEWED	DATE
CAH	CAH	DCB	12/10/08
CHECKED	REVISED	STRUCTURE FILE NUMBER	
SRB		VARIOUS	

STRUCTURE REPAIR DETAILS

BRIDGE No: MOT-75-0666R, 1208, 1226R, 1261L&R, 1271L,R & D AND 1281L&R
INTERSTATE 75 BRIDGES

D07-BH-FY2009
PID No. 83358

J:\TS\07\07-229 ODOT District 7 GES\80631\structures\7a-7e Combined\7AE_SD002.dgn 1/8/2009 8:41:38 AM arhayes ODOT_MS_PDF_FULL.plt ODOT_MS_PENTABLE.tbl M-E Companies, Inc.